OPERATING GUIDE

For The

MODEL 300/600

HIGH SPEED MICR PRINTER

Kerning Data Systems Inc.

Printed in U.S.A.

P/N 301981-001
March 2006
Rev.B

The material in this document is for information purposes and is subject to change without notice.

Communications Warning Notices

Federal Communications Commission (FCC) Statement: This equipment has been tested and found to comply with the limits for a Class A digital device, pursuant to part 15 of the FCC Rules. These limits are designed to provide reasonable protection against harmful interference when the equipment is operated in a commercial environment. This equipment generates, uses, and can radiate radio frequency energy and, if not installed and used in accordance with the instruction manual, may cause harmful interference to radio communications. Operation of this equipment in a residential area is likely to cause harmful interference, in which case the user will be required to correct the interference at his own expense.

Properly shielded and grounded cables and connectors must be used in order to meet FCC emission limits. Kerning Data Systems Inc. is not responsible for any radio or television interference caused by using other than recommended cables and connectors or by unauthorized changes or modifications to his equipment. Unauthorized changes or modifications could void the user's authority to operate the equipment.

European Union (EC) Electromagnetic Compatibility Directives: This product is in conformity with the protection requirements of EC Council Directive 89/336/EEC on the approximation of the laws of the Member States relating to electromagnetic compatibility: EN 50081-1 – General emission standard for Residential and Commercial environments Limits and Method of Measurement of Radio Interference Characteristics Information Technology Equipment by conduction and radiation, and EN 50082-1 – Generic Immunity Standard of Residential, Commercial, and Light Industrial Products. Kerning Data Systems Inc. cannot accept responsibility for any failure to satisfy the protection requirements resulting from a non-recommended modification of the product.

Properly shielded and grounded cables and connectors must be used on order to reduce the potential for causing interference to radio and television communication and to other electrical or electronic equipment.

Model KDS-300/600 OPERATING GUIDE

TABLE OF CONTENTS

FIGURES

The Model 300/600 MICR Printer

I. GENERAL INFORMATION

The Model 300/600 is a MICR (Magnetic Ink Character Recognition) document printer. The printer utilizes a drum with the characters etched at 8 characters per inch and is available with either E13B or CMC7 MICR characters. The characters are printed with a total-transfer MICR ink ribbon. Paper is transported through the printer by use of four pin-feed tractors. The Model 300 has 56 print columns and the Model 600 has 120 columns.

(This page left intentionally blank.)

1.1 Specifications

Print columns		
Model 300	56	
Model 600	120	
Character density	8 per inch	
Font	E13B or CMC7 MICR	
Line density	6 or 8 lines per inch	
Triple Interface	Centronics Parallel Dataproducts Parallel RS-232 Serial	
Ribbon	Total-transfer MICR	
Model 600 standard	190 yards. x 16 inches (two-wide checks)	
Checks/ribbon	100,000 approximately (two-wide checks)	
Optional	2500 feet x 7.5 Inches (one-wide checks)	
Checks/ribbon	230,000 approximately (one-wide checks)	
Paper	MICR bond check stock	
Thickness	.004 - .007 inches	
Weight	24 lb. to 90 lb.	
Max. width	21.5" sprocket hole centers	
Power requirements		
Single phase	115 VAC +/- 10%, 15 A, 60 Hz	
Weight	Printer alone	Shipping
KDS-300/600	530 lb.	660 lb.
Dimensions		
Height	48 inches	60 inches
Width	36 inches	42 inches
Depth	40 inches	53 inches
Operating environment	10°C to 30°C, 30 to 70% humidity (non-condensing)	

Options

230 VAC, 50 or 60 Hz, Single Phase

Split ribbon kit

II. INSTALLATION

This section provides the installation and configuration procedures for the document printer. Included in the procedures are:

Space requirements
Unpacking/repackaging
Interface connection and configuration

2.1 Space Requirements

The following figures illustrate the space requirements for the printer. Additional space around the printer for operating and maintenance personnel should be considered.

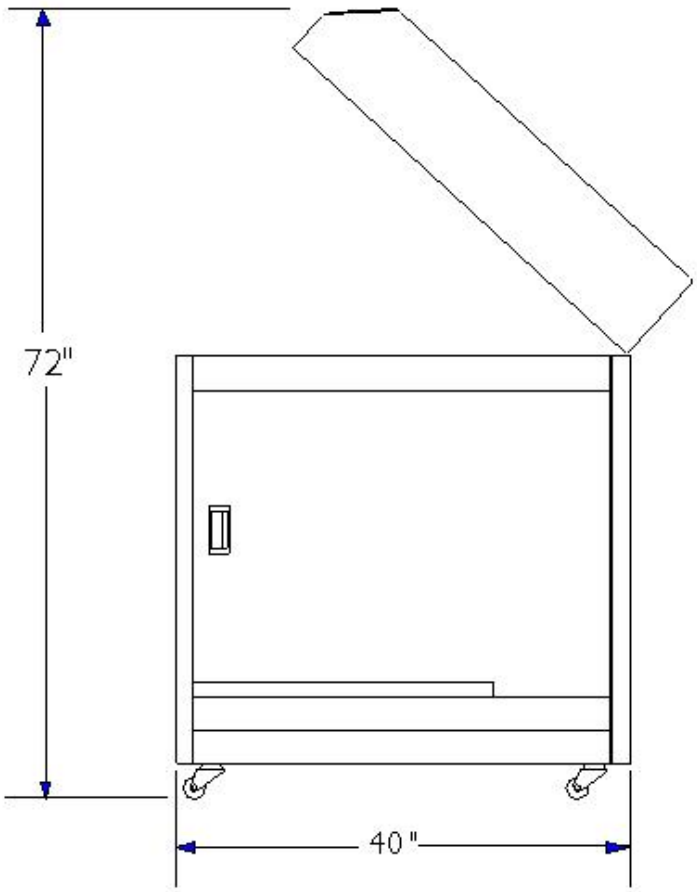

Figure 2.1 Printer Side View

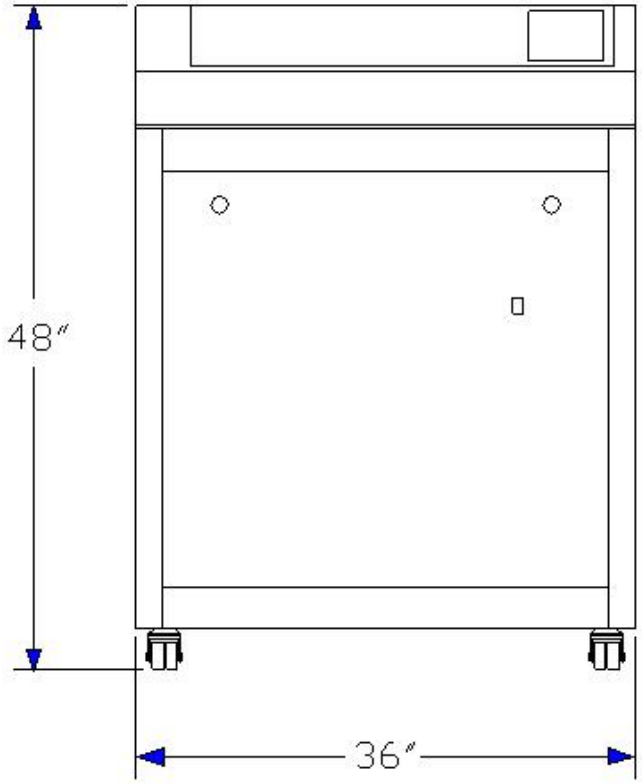

Figure 2.2 Printer Front View

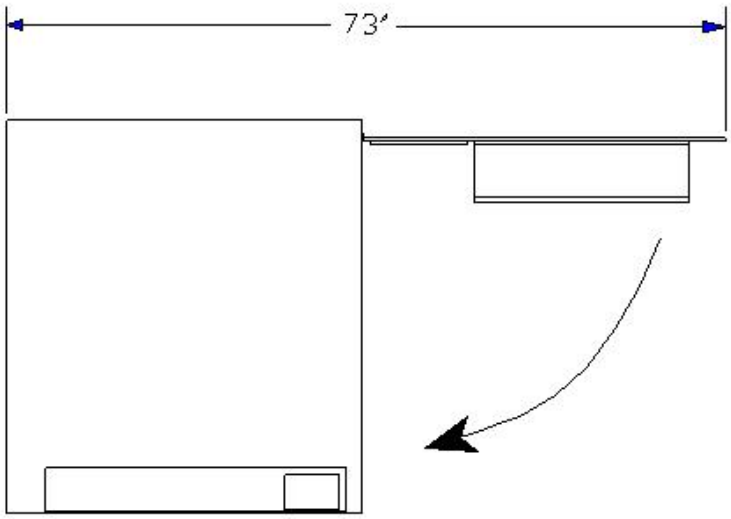

Figure 2.3 Printer Top View

2.2 Unpacking

Save all major packing materials for repackaging should re-shipment be required. The following tools are required to unpack the printer:

Diagonal cutters
2.5 mm ball hex key wrench
3 mm ball hex key wrench
Adjustable open end wrench, or
3/4" open end wrench
9/16" open end wrench

WARNING

This procedure requires three people to properly unpack the printer.

1. Locate the pallet in a location with sufficient room to vertically remove the carton and to roll the printer down the loading ramps.

2. While holding the ramps against the packing carton, cut the shipping straps and lower the ramps to the floor.

3. Cut the remaining shipping straps.

4. Vertically remove the shipping carton and the protective vinyl bag.

5. Open the paper compartment and remove the ramp supports, mounting hardware, lifting levers, and rachet wrench.

6. With the ratchet wrench install the ramp supports to the underside of the ramps with the mounting hardware.

7. From under the pallet, loosen the nuts securing the four J-hooks and disengage the hooks from the corners of the printer cabinet.

8. Raise the ramps and remove the three lag bolts securing the printer shipping support. Return the ramps to the lowered position.

9. Place the two lifting levers across the pivot board at position 1 with three inches of the lever under the printer (mark A).

10. While two people step on the levers to raise the printer, a third person can remove the shipping support.

11. Slowly lower the printer onto the pallet.

CAUTION

To prevent injury or damage to the printer, care should be taken to prevent the printer from sliding off the second shipping support.

12. Remove the three lag bolts securing the second printer shipping support.

13. Place the two lifting levers across the pivot board at position 2 with three inches of the lever under the printer (mark A).

14. While two people step on the levers to raise the printer, a third person can remove the shipping support.

15. Slowly lower the printer onto the pallet.

16. To remove the printer, it is recommended that two people guide the printer down the ramps.

CAUTION

To prevent injury or damage to the printer, care should be taken to prevent the printer from sliding off the ramps.

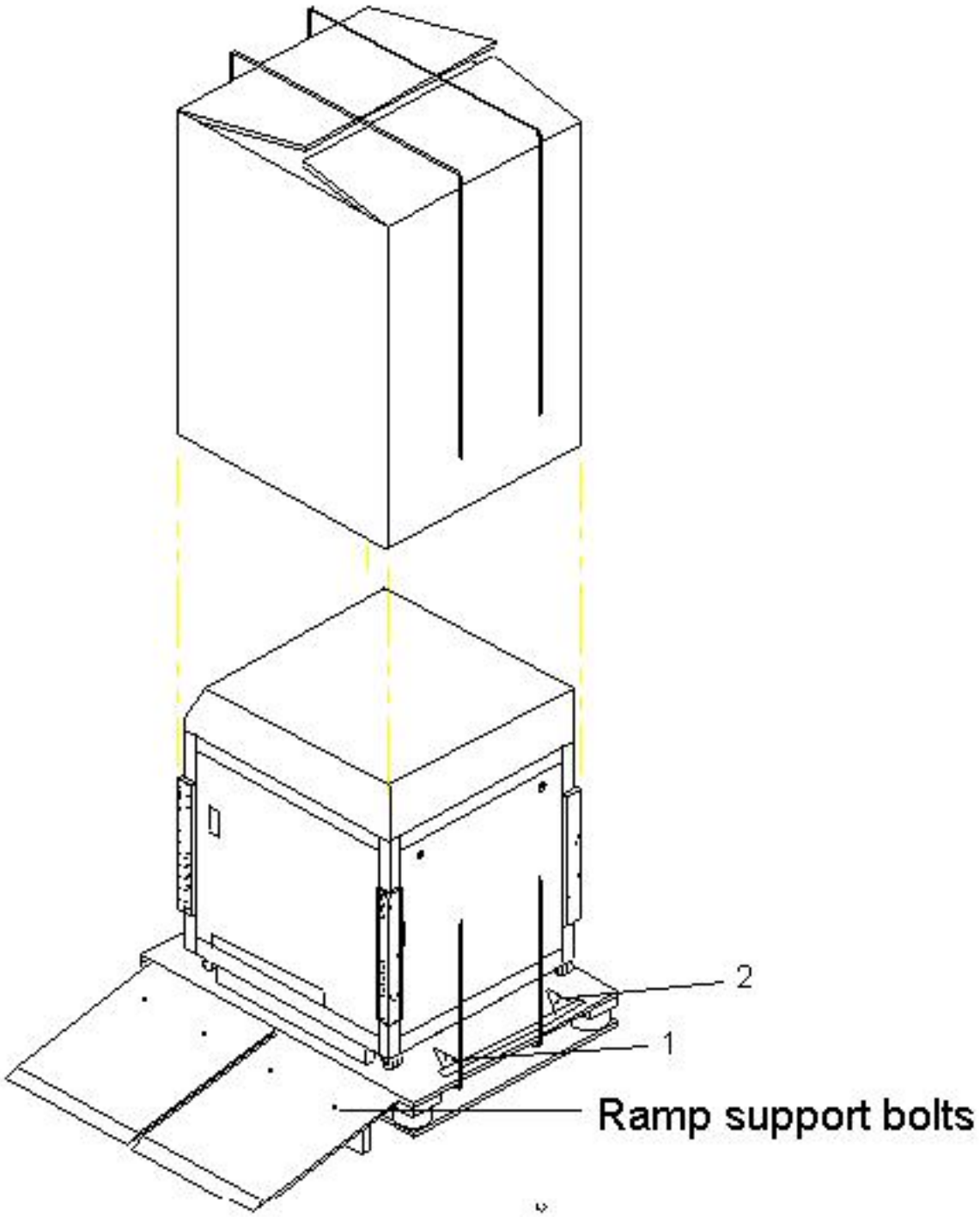

Figure 2.4 Packaging

2.3 Configuration

Perform the following procedures to configure the interface protocol:

A. Power up the printer, note that the printer is in the offline state as seen in the 16 column display.

B. Depress the PROG key to enter the program mode. (For a detailed explanation, refer to section 3.4).

C. Use the NEXT key to sequence to the character set menu (refer to section 3.10.1). Use of the ENTER key will toggle between ASCII MODE and DATAPRODUCT MODE. The last value displayed is saved in non-volatile memory when exiting this routine.

D. Use the NEXT key to advance the program menu to the Select Interface Routine (refer to section 3.14). The NEXT key sequences the selection of Centronics parallel and Dataproducts parallel, or RS-232C serial. The serial interface operates at 1200, 2400, 9600, and 19200 BPS speeds. Use the ENTER key to select the desired interface and to store the interface information in non-volatile memory.

E. Exit the program mode (CLEAR), and return to the on line state for normal operation (ONLINE).

2.4 Interface Cable Requirements

Centronics Parallel

Pin	Signal Description
1	Strobe*
2	Data 1
3	Data 2
4	Data 3
5	Data 4
6	Data 5
7	Data 6
8	Data 7
9	Data 8
10	ACK*
11	BUSY
12	PE
17	Chassis ground
19-30	Signal ground
31	Input Prime*
32	Fault*

* indicates low true signal.

The mating connector is a 36 pin male "Centronics".

Dataproducts Parallel

DB50 Pin	Signal Description
38	Strobe
19	Data 1
20	Data 2
1	Data 3
41	Data 4
34	Data 5
43	Data 6
36	Data 7
28	Data 8
23	Demand
21	On Line
22	Ready
30	Paper Instruction
12	+5V
37	Strobe rtn
3	Data 1 rtn
4	Data 2 rtn
2	Data 3 rtn
40	Data 4 rtn
18	Data 5 rtn
42	Data 6 rtn
35	Data 7 rtn
44	Data 8 rtn
7	Demand rtn
6	Ready rtn
5	On Line rtn
14	Paper Instruction rtn
46	Interface Verify
45	Interface Verify rtn

The required mating connector is a DB50P (male).

Serial Interface

Pin	Signal Description
2	Transmitted Data (TxD)
3	Received Data (RxD)
7	Signal Ground
20	Data Terminal Ready (DTR)

The serial interface is configured to respond to either XON/XOFF or DTR handshaking. The character data format is eight bits, no parity, and one stop bit. The required mating connector is a DB25P (male).

2.5 Character Set Codes

E13B	CMC7	ASCII Mode			Dataproducts Mode		
		Hex	Dec	Char	Hex	Dec	Char
Space	Space	20	32	<sp>	20	32	<sp>
0	0	30	48	0	21	33	!
1	1	31	49	1	22	34	“
2	2	32	50	2	23	35	#
3	3	33	51	3	24	36	$
4	4	34	52	4	25	37	%
5	5	35	53	5	26	38	&
6	6	36	54	6	27	39	‘
7	7	37	55	7	28	40	(
8	8	38	56	8	29	41	)
9	9	39	57	9	2A	42	*
Trans	S1	26	38	&	2B	43	+
Amount	S2	24	36	$	2C	44	,
On-Us	S3	2F	47	/	2D	45	-
Dash	S4	2D	45	-	2E	46	.
	S5	21	33	!	2F	47	/

2.6 Format Control Codes

Paper motion is accomplished by using the standard ASCII format control codes of line feed (Hex 0A), form feed (Hex 0C), and carriage return (Hex 0D), plus channel and step codes listed below. Step count codes permit the printer to move paper from 0 to 15 lines. There are 12 channels that can be used as vertical tab stops. The channel code slews the paper to the next stop and each channel can have multiple stops.

NOTE

Executing a command to an unloaded channel will result in no paper movement, the same as issuing a Carriage Return.

Channel	Hex	Dec
1	80	128
2	81	129
3	82	130
4	83	131
5	84	132
6	85	133
7	86	134
8	87	135
9	88	136
10	89	137
11	8A	138
12	8B	139

Step	Hex	Dec
0	90	144
1	91	145
2	92	146
3	93	147
4	94	148
5	95	149
6	96	150
7	97	151
8	98	152
9	99	153
10	9A	154
11	9B	155
12	9C	156
13	9D	157
14	9E	158
15	9F	159

To permit non-standard data spacing, three small-increment skip codes are available. These codes position forms at fractions of the normal 1/6 inch or 1/8 inch line spacing.

B0 = 1/24 inch
B1 = 2/24 inch
B2 = 3/24 inch

Codes are available to buffer the MICR printer when used with a text printer which runs at a slower rate. This buffering helps to maintain the paper drape length by adding a delay after paper motion. Multiple codes can be sent to the printer to accumulate the appropriate delay.

10 = 20 msec
11 = 120 msec

2.7 Job Programming (Talk Mode)

A. The printer parameters may be download programmed via the talk mode commands. Talk mode permits the selecting and setting of the job number, the form length, the lines per inch density, and Dataproducts compatible vertical channel stops. (VFU channel or step commands are usable through both of the printer interfaces: Centronics and Dataproducts.)

B. To enter talk mode for the purpose of downloading job information prior to sending data to print, the host computer must issue ESC ESC (Hex 1B, 1B) followed by a carriage return, CR (Hex 0D). The printer will be put into a non-echoing talk mode, but will execute the commands sent to it. A summary of the talk mode commands are listed below:

Buffered Commands:

ESC ESC	Enter Talk mode
J n1 n2 n3	Set or select job number, form length, LPI
C n1 s1 s2	Set channel stops
Y n1	Execute paper channel stop
Z n1	Execute paper step
Dxxxxxxxx	Load data into buffer
S	Status. Responds with current control panel configuration, sensor readings and faults
P	Print data buffer contents
H	Tests for open coils on all hammers
N	Leave talk mode, go online
F	Leave talk mode, go offline
X	Echo on/off
ESC	Buffer clear

All buffered commands require a CR to execute and may be erased with a backspace. Commands with a parameter require a separation of one blank space between parameters.

Immediate Commands:

*	Step ribbon
?	Help menu for talk mode
+	Line feed
^	Adjust paper up
%	Adjust paper down
[	Set top of form

Immediate commands are executed upon entering the character and do not require a CR. If keyed while entering a buffered command, the immediate command will be executed.

Examples:

1. To download job 2 with 66 line form length and 6 lines per inch, this string must be sent to the printer:

   ESC ESC CR

   J 2 66 6 CR

   N CR

2. To set VFU channel 3 with paper stops at line 2, 22, and 42 the following string must be sent to the printer:

   ESC ESC CR

   C 3 2 22 42 CR

   N CR

NOTE

Talk mode is case sensitive, all lowercase characters used for commands will be ignored.

(This page left intentionally blank.)

III. OPERATOR CONTROLS AND ADJUSTMENTS

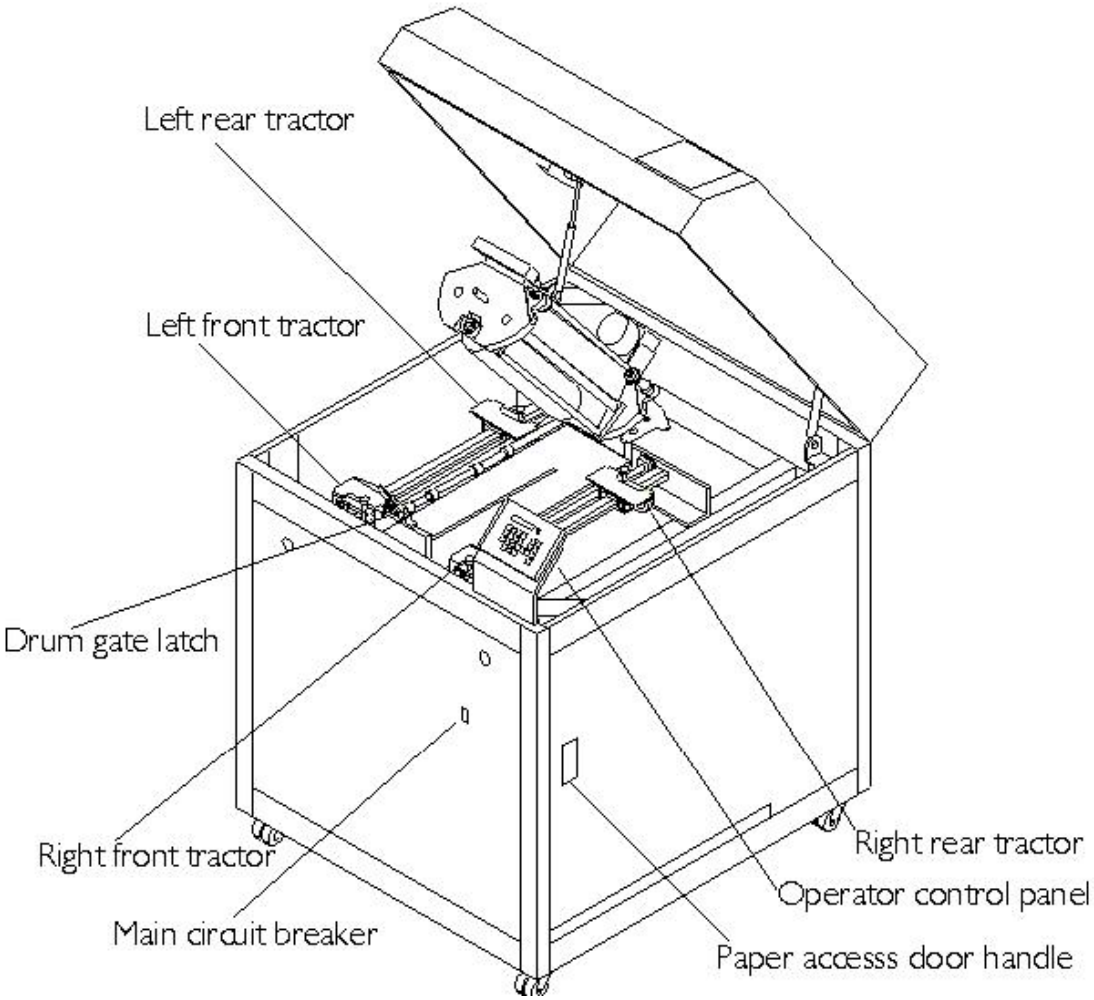

Figure 3.1 Operator Controls

3.1 Control Panel Operation

A. The operator's control panel is made up of a 23 button keypad, a 16 column alphanumeric display, and two LED indicators. The keypad directs printer operation with multilevel menu driven routines.

Below is a description of the use of the keypad:

Key	Function
0-9	Used for numeric entries.
PROG	Used to select the program mode. Displays **PROGRAM MODE**.
LF	Used to increment the paper feed system one line while in the offline mode. Displays **LINE FEED**.
FF	Used to increment the paper feed system to the next top of form while in the offline mode. Displays **FORM FEED**.
RESET	Selects the initialize printer routine, clearing all the registers and faults; and resetting the hammer protect relay. Displays **<ENTER> TO RESET**. Nonvolatile memory is not affected.
Up Arrow	Offline mode: NEXT key toggles paper increment between **FINE ADJUST** (1/24"), and **COARSE ADJUST** (7"); displays **ADJUST PAPER UP**. Test Print mode: 7" scroll forward. Hammer Flight Time mode: increments hammer column number selected by 10 columns.
Down Arrow	Offline mode: Paper decrement **FINE ADJUST** (1/24"); displays **ADJUST PAPER DOWN.** Test Print mode: 7" scroll backward. Hammer Flight Time mode: decrements hammer column selected by 10 columns.

Key	Function
RIBBON	Increment the ribbon one step and displays **STEP RIBBON**. Ribbon will continue to increment while the key is depressed.
SET TOF	Repositions the first line of a form from the bottom edge of the left tractor door to the print station. Displays **SET TOF <ENTER>**.
HELP	Displays all settings in the currently selected job.
ONLINE	Switches the printer between online and offline modes.
CLEAR	Erases the last entry or exits a routine.
NEXT	Increments to the next option in a menu.
ENTER	Selects a menu option or loads data.
ON LINE LED	The green lamp indicates the printer is in the on line state when illuminated.
FAULT LED	The red lamp flashes when an error condition exists and is displayed.
1	Upon entering Program mode (display reads **JOB # SELECTED**): Jumps to the test print routine and starts continuous sliding pattern.
1	Offline mode: Goes online, prints one line of data, and returns to offline. Printer will not print if fault exists.
1	Test print: Switches test print images from 64 to 120 columns. Does not affect online printing.
7	Offline mode: With the bar code option enabled, reads the initial bar code and positions the paper in the print station.

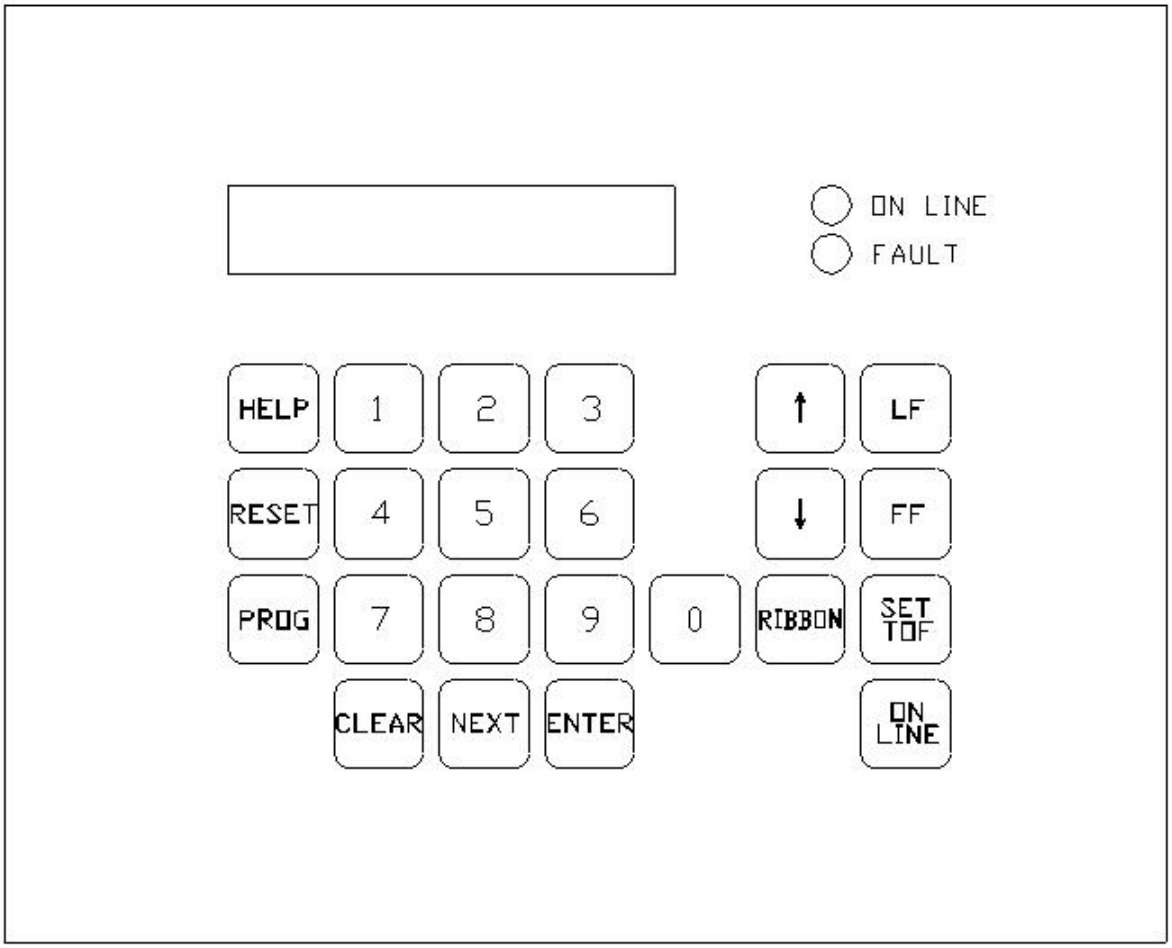

Figure 3.2 Control Panel

3.2 Power Up Sequence

A. Display reads **MODEL 300 OR 600** while the printer runs self test routines.

B. At end of self test routine the printer energizes the hammer power relay and displays **OFFLINE**.

3.3 ONLINE Key

A. Depressing the ONLINE key toggles the printer between the **ONLINE** and **OFFLINE** modes.

Power Up Sequence

Display Reads

MODEL 300

OFFLINE

ONLINE Key

Display Reads

ONLINE

OFFLINE

ONLINE

3.4 Program Mode

A. To enter the Program mode depress the ONLINE key to display **OFFLINE** on the control panel.

B. Press the PROG key and **PROGRAM MODE** is displayed, followed by **JOB # SELECTED**.

C. Press the NEXT key to step through the menu sequence.

Program Mode

Display Reads

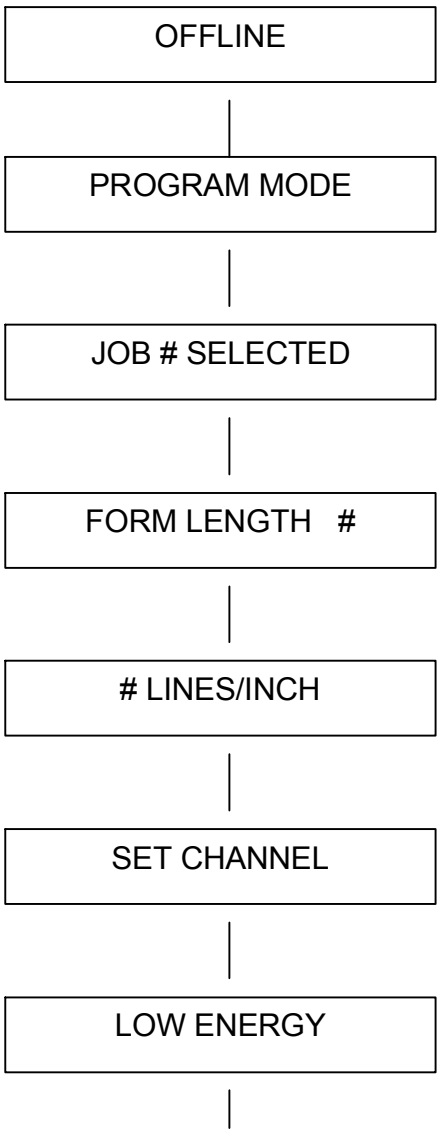

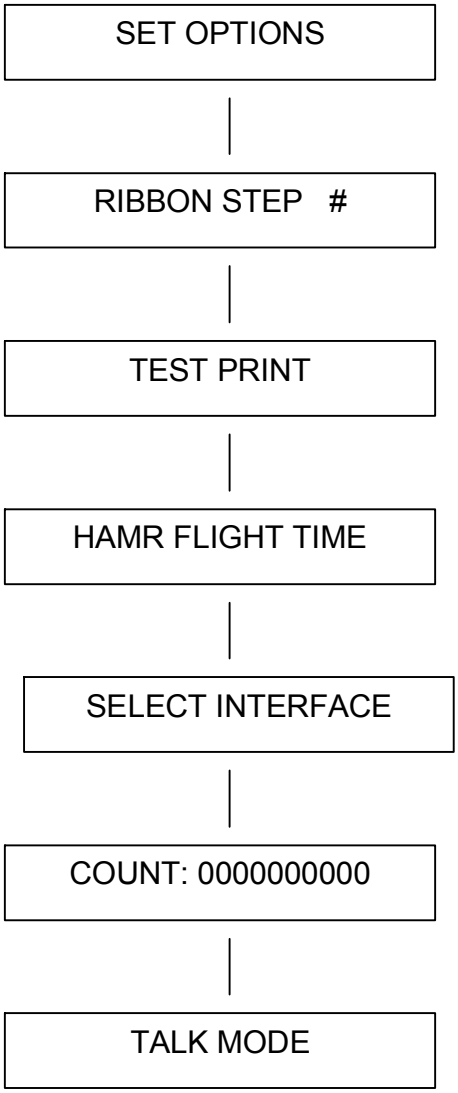

3.5 Job Selection Routine

A. Control panel displays **JOB X SELECTED** where X is a from 1-5.

B. To select a new job pressing ENTER will display **SELECT JOB:** choose a job from 1-5 and ENTER. The display will respond with **JOB # SELECTED**.

C. To remain with the current job press CLEAR and return to the Program mode menu.

3.6 Form Length Routine

A. The **FORM LENGTH X** displays the current number of lines per form.

B. To change the value, press ENTER and the display reads **CHANGE TO: ##**. Use the number keys to configure a value from 1 to 255 followed by the ENTER key.

C. The display responds with **CHANGED TO Y** and returns to the Program mode with **FORM LENGTH Y** displayed.

D. To return to the Program mode menu without changes press the CLEAR key.

Job Selection Routine

Display Reads

JOB X SELECTED

SELECT JOB:

JOB Y SELECTED

Form Length Routine

Display Reads

FORM LENGTH X

CHANGE TO: ##

CHANGED TO Y

FORM LENGTH Y

3.7 Line Density Routine

A. The display reads **X LINE/INCH** where X is either 6 or 8.

B. To toggle the display press the ENTER key.

C. The display information is saved when exiting the routine.

3.8 Set Channel Routine

A. Press ENTER to begin the routine.

B. **JOB # CHANNEL 1** is displayed.

C. The channel number is increased or decreased by using the NEXT, Up-Arrow, or Down-Arrow key.

D. Depress the ENTER key to select the channel number.

E. ENTER STOPS: is displayed.

F. Enter all stop locations separated with a space (NEXT key). Entries can be erased with the CLEAR key.

G. Press the ENTER key to store the stop locations and the display will flash **CHANNEL SET** and return to the menu and display **JOB # CHANNEL X**, where X is the currently selected channel.

H. Repeat the procedure for additional channels.

I. The CLEAR key is used to erase the previous entry while entering channels. All other usage will return to the Program mode.

Line Density Routine

Display Reads

6 LINES/INCH

or

8 LINES/INCH

Set Channel Routine

Display Reads

SET CHANNEL

|

JOB # CHANNEL 1

|

ENTER STOPS:

|

CHANNEL SET

|

JOB # CHANNEL 1

3.9 Print Energy Routine

A. The ENTER key steps through the energy options.

B. To exit the routine, press the CLEAR key. Note: the CLEAR key does not restore to the original setting. The value last displayed is saved into non-volatile memory upon exiting this routine.

3.10 Set Options

A. The SET OPTIONS section permits operator selectable adjustments for different operating environments. The NEXT key steps through the options menu and the CLEAR key returns to the PROGRAM mode menu.

3.10.1 Character Set Routine

A. Press the ENTER key and the display toggles between ASCII MODE and DATAPRODUCT MODE.

B. To exit the routine press the CLEAR key. The last value displayed is saved into memory upon exiting the routine.

Print Energy Routine

Display Reads

LOW ENERGY

or

MEDIUM ENERGY

or

HIGH ENERGY

Set Options

Character Set Routine

Display Reads

ASCII MODE

or

DATAPRODUCT MODE

3.10.2 Illegal Code Routine

A. The printer can either leave a blank print position or ignore unprintable character codes.

B. The ENTER key toggles the control panel display between **ACCEPT ALL CODE** or **IGNORE NON CODE**.

C. CLEAR returns the printer to the PROGRAM menu.

3.10.3 Print to End of Form Routine

A The printer can either stop immediately with an out of paper fault or continue to the bottom of the current form.

B. The ENTER key toggles the control panel display between **NO PRINT TO EOF** or **OK PRINT TO EOF**.

C. CLEAR returns the printer tro the PROGRAM menu.

3.11 Ribbon Step Distance Routine

A. Control panel displays RIBBON STEP X where X is a number from 22 - 32.

B. The step number is increased or decreased by using the Up-Arrow or Down-Arrow key. Twenty-two is the minimum step and thirty-two is the maximum step length.

C. Press the ENTER key to save a new value. The display responds with CHANGED TO XX and returns to RIBBON STEP X.

D. To return to Program mode without changes press the CLEAR key.

Set Options

Illegal Code Routine

Display Reads

ACCEPT ALL CODE

or

IGNORE NON CODE

Print to End of Form Routine

Display Reads

NO PRINT TO EOF

or

OK PRINT TO EOF

Ribbon Step Distance Routine

Display Reads

RIBBON STEP X

USE <UP/DN>: ##

CHANGED TO: XX

RIBBON STEP X

3.12 Test Print Routine

A. Press the ENTER key to begin the test print routine.

B. The control panel displays a pattern of all zeros.

C. The NEXT key displays the print patterns. They include:
All 0's
All 9's
All 8's
All 7's
Alternating columns:
(0, space, 0 and 7, space, 7)

D. Press the ENTER key to select the pattern and **<ENTER> TO PRINT** is displayed.

E. If the ENTER key is pressed, one line is printed. If the NEXT key is pressed, **<ENTER> TO START** is displayed.

F. At this prompt, the ENTER key prints one line per form length and slides the pattern to the left one column on the next line printed.

G. Press any key to stop the continuous print operation.

H. **<ENTER> TO START** is displayed.

I. To exit any individual print routine press the CLEAR key and a different print pattern may be selected with the NEXT and ENTER keys. To exit TEST PRINT press CLEAR two times.

NOTE

Depressing the 1 key on a Model 600 while displaying the test print pattern will switch between 64 and 120 column testing images. This permits the Model 600 to test print on narrow paper. This feature does not affect online printing.

Test Print Routine

Display Reads

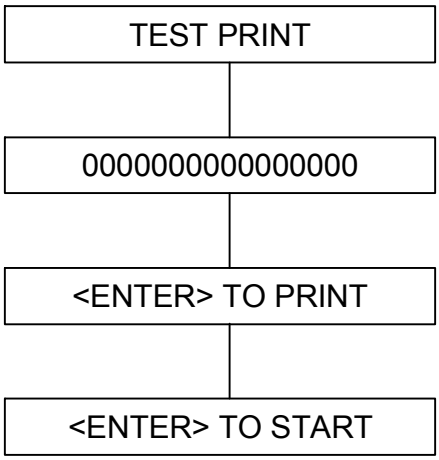

Narrow Paper Feature

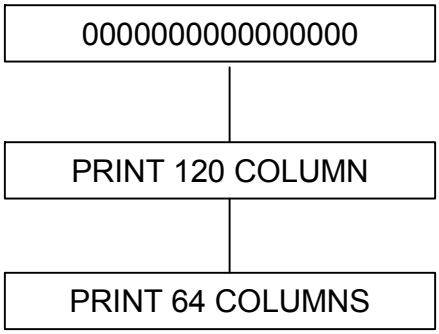

3.13 Hammer Flight Time Routine

A. Remove the paper from the printer, leaving only the ribbon installed.

B. Press ENTER to select the routine.

C. HAMR 1 is viewed in the display.

D. To modify the column number use the NEXT key to increment by one or the Up/Down Arrow keys to increment/decrement by 10.

E. Press the ENTER key to fire the selected hammer. **HAMR # XXXX** is viewed in the display.

F. The **#** is the column number and the **XXXX** is flight time. The acceptable time range is 3650 - 3750.

G. If the flight time value displayed is outside the acceptable range, adjust the appropriate backstop screw and continue firing the hammer until the value is set at 3700.

H. To exit the routine press the CLEAR key.

3.14 Select Interface Routine

A. Press the ENTER key to start the routine and to display the current interface.

B. Use the NEXT key to step through the interface options: **CENTR PARALLEL**, **DPC PARALLEL** ,or **RS232 SERIAL**.

C. To select an interface press the ENTER key and the display reflects the selection with either **CENT PAR**, **DPC PAR**, or **SERIAL SELECTED**.

D. If a parallel interface is chosen, the routine returns to the Program Mode menu after a short pause and the display indicates **SELECT INTERFACE**.

NOTE

It is recommended to initialize the printer after changing a parallel interface selection., In offline mode depress the RESET key and then ENTER when **<ENTER> TO RESET** is viewed.

E. If the RS232 serial interface is chosen, the display indicates the current baud rate.

F. Press the NEXT key to step through the available baud rates.

G. The ENTER key is used to select the desired baud rate.

H. After a short pause, the display indicates **XXXX SELECTED** and returns to the Program mode.

Hammer Flight Time Routine

Display Reads

HAMR FLIGHT TIME

HAMR 1

HAMR 1 ####

Interface Selection Routine

Display Reads

SELECT INTERFACE

CENTR PARALLEL

or

DPC PARALLEL

XXX PAR SELECTED

SELECT INTERFACE

or

RS232 SERIAL

SERIAL SELECTED

BPS

3.15 Talk Mode Routine

A. To select the routine press the ENTER key.

B. **IN TALK MODE** is displayed on the control panel. The printer may now be exercised by the local terminal or computer.

C. To exit the Talk mode, press the CLEAR key and enter the offline mode.

Talk Mode Routine

Display Reads

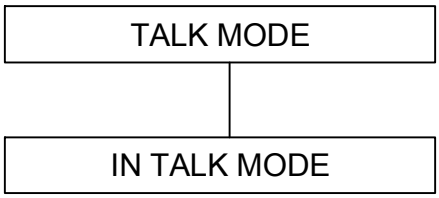

3.16 Ribbon Loading

A. To load the ribbon, verify the printer is offline, raise the top cover, and open the drum gate. The print drum will stop to permit ribbon replacement.

B. Cut and remove an existing ribbon, then install the empty supply core in the take-up ribbon holders. For initial installation, a ribbon and empty core are found in the shipaway kit.

C. Grasp the supply ribbon holder pin and pull to separate the ribbon core holders.

D. Install the new ribbon in the holders as shown on Figure 3.3 and release the pin. Check the ribbon holders for full engagement with the ribbon core.

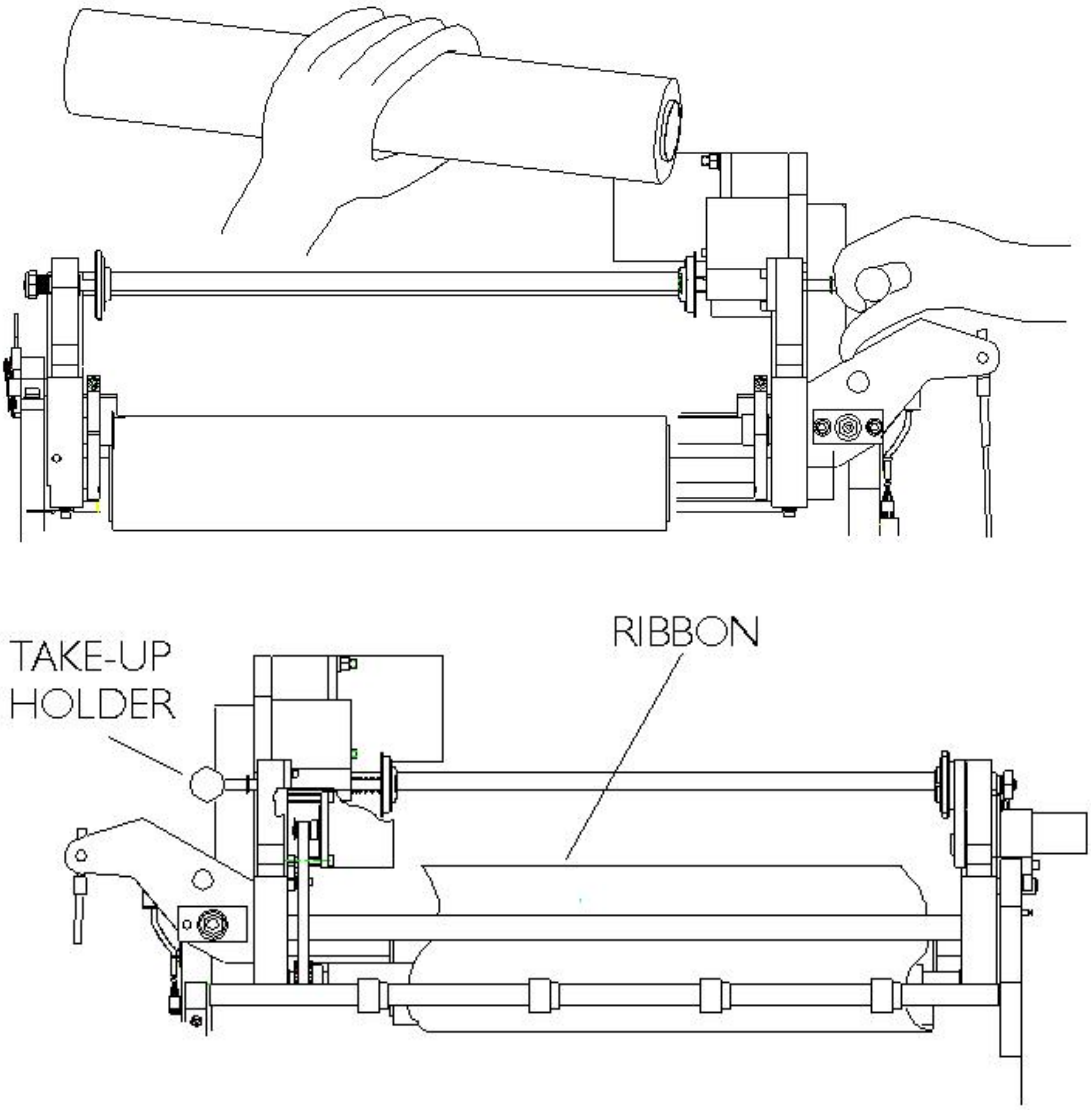

Figure 3.3 Ribbon Spool Loading

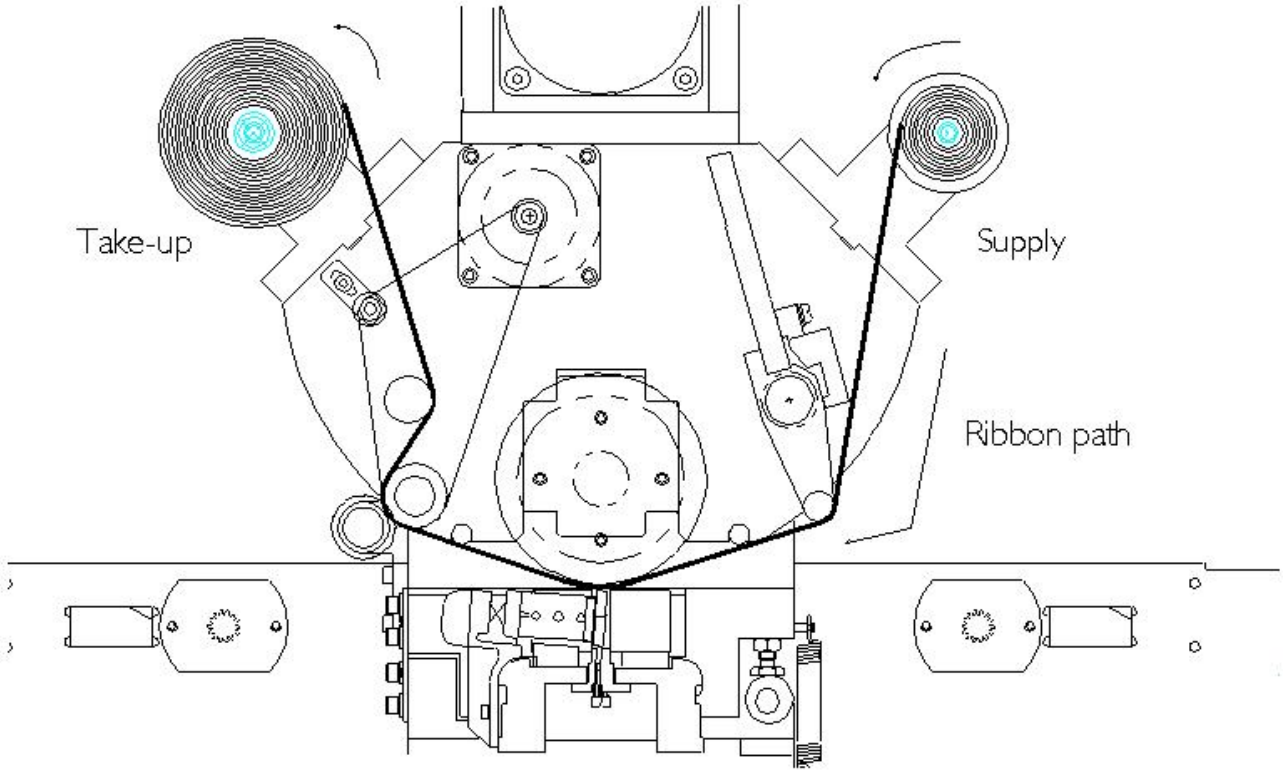

Figure 3.4 Ribbon Path

E. Lock the ribbon in position by tightening the nylon core locks to have minimum contact with the back of the ribbon mandrel.

F. The ribbon should unroll from the bottom over the buffer arm and under the drum with the ink face down, as shown in Figure 3.4.

G. Pass the leader of the new ribbon over the capstan roller, between the drum and the bridge support bar, and attach to the take-up core. Verify the proper engagement of the holders with the core.

H. Allow the ribbon to wind from the top with the ink towards the core as shown in Figure 3.4.

I. Depress the RIBBON key to tension the ribbon and continue to move the ribbon until fresh ribbon is positioned above the hammerbank.

J. If initial ribbon installation, load and position paper as required.

K. Close the drum gate and lower the top cover.

L. Press ONLINE to restart the drum and continue normal operation.

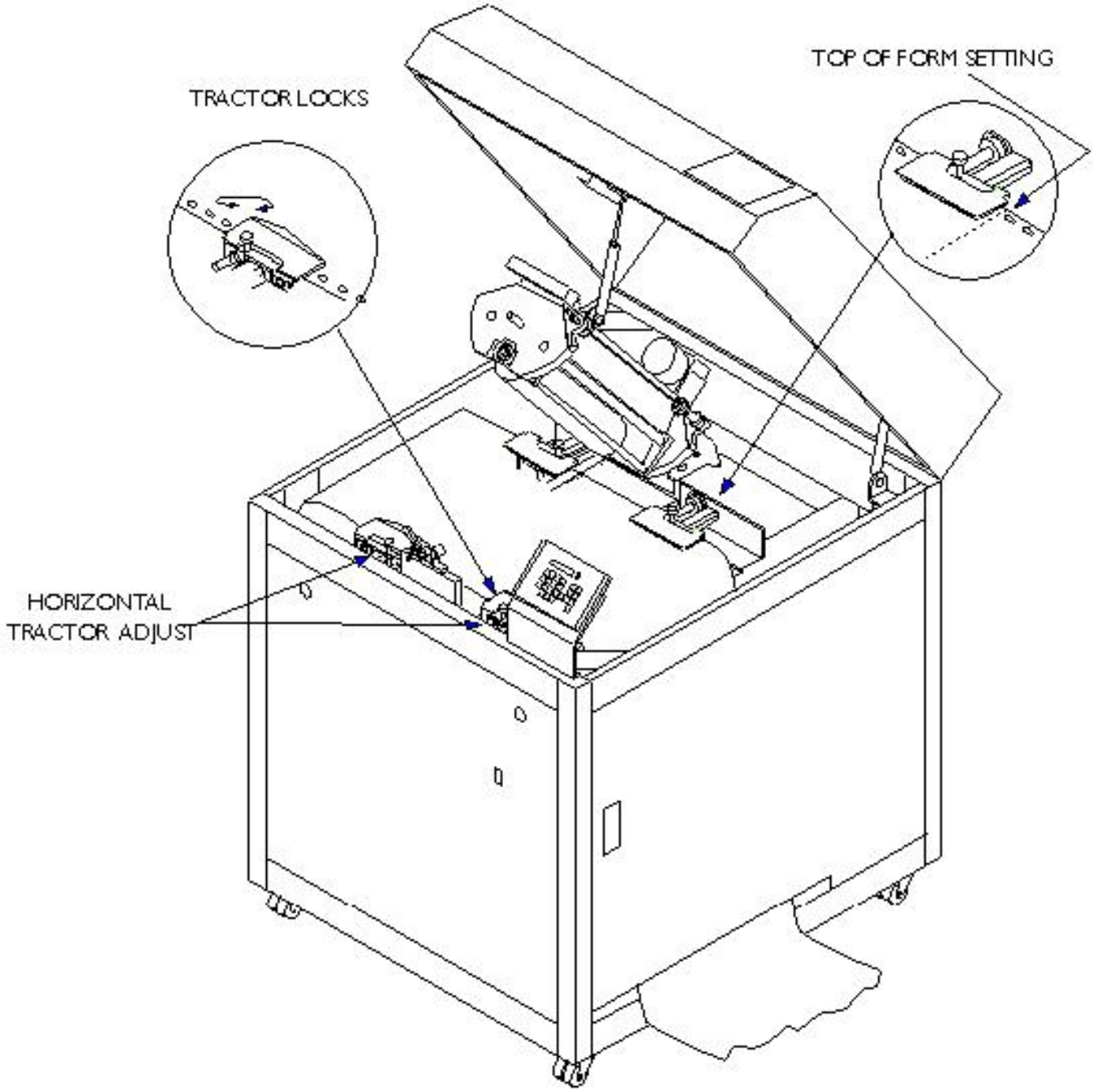

Figure 3.5 Paper Loading

3.17 Paper Loading

A. With the printer in the offline state, loosen the four tractor lock knobs to permit horizontal tractor alignment. Open the tractor doors. (See Figure 3.5)

B. Open the drum gate.

C. Open the paper access door on the right side of the printer.

D. Position the paper to permit its placement through the open door, under the drum, and across the tractors.

D. Position the left front tractor to engage the tractor pins with the sprocket holes in the forms. Lock the tractor.

E. Engage the right front tractor and tension the paper to remove any bows or wrinkles. Lock the tractor.

F. Engage the left rear and right rear tractors, horizontally tension the paper, and lock the tractors.

G. A horizontal vernier permits the fine positioning of the paper by moving all four tractors. The range of the vernier is 0.50 inches.

H. Close the paper access door.

I. Vertical paper tension is adjusted by releasing the tractor clutch knob and turning the front spline shaft to eliminate paper blousing, and retightening the tractor clutch knob.

J. Advance the paper until it reaches the paper puller.

K. Guide the paper between the top and bottom rollers.

L. During normal operation, the paper puller continues to run for two seconds after every paper movement.

3.18 Set Top of Form

A. Place the printer in the OFFLINE mode. Use the Up/Down Arrow and/or LINE FEED keys to align the top of the first line of a form to the bottom of the right bottom tractor door, as seen in Figure 3.5.

B. To make fine adjustments, use the up/down arrows to make fine or extra fine paper movement in offline mode.

C. Depress the SET FF key to record the top of form setting. The display will read **SET TOF <ENTER>**. Pressing ENTER will record the top of form location and position the first line under the print drum.

D. Place the printer in the ONLINE mode.

IV. FAULT DIAGNOSIS

4.1 Error Messages

RIBBON OUT	End of ribbon sensed. Install new ribbon, press ONLINE key to continue.
PAPER JAM	No paper motion detected. Press ONLINE key to clear error message, **OFFLINE** is displayed. Clear paper path. Press ONLINE key, **CLEAR BUF <ENTER>** is displayed. To continue press ONLINE key, to clear data buffer press ENTER key.
PAPER OUT	End of paper sensed. Press ONLINE key to clear error message, **OFFLINE** is displayed. Clear paper path or install new paper forms. Press ONLINE key, **CLEAR BUF <ENTER>** is displayed. To continue press ONLINE key, to clear data buffer press ENTER key.
DRUM FAULT	No drum motion detected. Correct drum error. Press ONLINE key to clear error message, **OFFLINE** is displayed. Press RESET and ENTER keys to initialize printer. If fault persists, call service personnel to repair fault.
CHAR CLK FAULT	Wrong number of Character Clocks. Data integrity error. Call service personnel to repair fault.
HAMR # ERROR	Bad hammer position. Press any key to report errors until OFFLINE is displayed. Call service personnel to repair fault.
HAMMER FAULT	One or more hammers has failed. Press any key to report errors until OFFLINE is displayed. Call service personnel to repair fault.
POWER FAULT	48 V power relay is not on. Press any key to report errors until OFFLINE is displayed. Press RESET and ENTER keys to initialize printer. If error continues call service personnel to repair fault.

DRUM GATE OPEN	Printer was not OFFLINE when drum gate was opened. Close drum gate and depress ONLINE key to restart drum.
BUFFER ERROR	Printer has received additional data while memory buffer is full. Place printer ONLINE and perform system restart procedure.
BAR CODE ERROR	The check code in a MICR line does not match the bar code. Verify the bar and check codes displayed on control panel. Either continue or clear print buffer and restart.

APPENDIX

A.1 E13B Split Drum Character Set Codes

E13B	Dataproducts Mode	
MICR	Hex	Dec
Space	20	32
0	21	33
1	22	34
2	23	35
3	24	36
4	25	37
5	26	38
6	27	39
7	28	40
8	29	41
9	2A	42
Trans	2B	43
Amount	2C	44
On-Us	2D	45
Dash	2E	46
ALPHA		
0	30	48
1	31	49
2	32	50
3	33	51
4	34	52
5	35	53
6	36	54
7	37	55
8	38	56
9	39	57
/	3A	58
-	3B	59
Nº	3C	60
*	3D	61
$	3E	62

A.2 CMC7 Split Drum Character Set Codes

CMC7	Dataproducts Mode	
MICR	Hex	Dec
Space	20	32
0	21	33
1	22	34
2	23	35
3	24	36
4	25	37
5	26	38
6	27	39
7	28	40
8	29	41
9	2A	42
S1	2B	43
S2	2C	44
S3	2D	45
S4	2E	46
S5	2F	47
ALPHA		
0	30	48
1	31	49
2	32	50
3	33	51
4	34	52
5	35	53
6	36	54
7	37	55
8	38	56
9	39	57
.	3A	58
(	3B	59
)	3C	60
,	3D	61
Nº	3E	62

KERNING DATA SYSTEMS PRINTER SERVICES
OFFERS THE FOLLOWING FOR YOUR PRINTER NEEDS

SUPPLIES:

SPARE PARTS:

PRINTER SALES INFORMATION:

(818) 882-8712
(818) 882-6532 FAX

NON-WARRANTY REPAIRS:

Call Factory Service for RMA Number (Return Material Authorization):

20801 Dearborn Street
Chatsworth, CA 91311-5916
(818) 882-8712

When returning for repair, please include the following:

1. RMA Number (No repairs processed without RMA #)
2. Bill and Ship-to Addresses
3. Proof of Purchase or Prior Repair
4. Purchase Order Number
5. Description of Problem
6. Contact Name & Phone Number
7. Method of Return Shipment

WARRANTY OR MAINTENANCE SUPPORT:

Call your Dealer / Distributor