MAINTENANCE MANUAL

For The

MODEL 300/600

HIGH SPEED MICR PRINTER

Kerning Data Systems Inc.

Printed in U.S.A.

P/N 301982-001
June 1998
Rev. A

TABLE OF CONTENTS

I. GENERAL INFORMATION . . . 1
1.1 Specifications . . . 2
1.2 Options . . . 2

II. INSTALLATION . . . 3
2.1 Space Requirements . . . 3
2.2 Unpacking . . . 5
2.3 Configuration . . . 8
2.4 Interface Cable Requirements . . . 8

III. THEORY OF OPERATION . . . 10
3.1 System Block Diagram . . . 10
3.2 Electronics . . . 10
3.2.1 AC/DC Power Distribution . . . 10
3.2.2 DC Distribution Board . . . 10
3.2.3 Bus Board . . . 11
3.2.4 Microprocessor Board . . . 11
3.2.4.1 Microprocessor Design . . . 11
3.2.4.2 Interface Data . . . 11
3.2.4.3 Paperfeed System . . . 11
3.2.4.4 Interlocks . . . 11
3.2.4.5 Drape Sensor . . . 12
3.2.4.6 Ribbon Drive . . . 12
3.2.4.7 Analog Design . . . 12
3.2.4.8 Hammer Protection Circuit . . . 13
3.2.5 Hammer Driver Board . . . 13
3.2.5.1 Hammer Circuit Design . . . 13
3.2.5.2 Hammer Test Routine . . . 13
3.2.5.3 Hammer Flight Time Routine . . . 13
3.2.6 Operator's Panel . . . 14
3.2.7 Paper Puller Board . . . 14
3.3 Mechanics . . . 14
3.3.1 Paperfeed System . . . 14
3.3.2 Ribbon System . . . 14
3.3.3 Paper Puller . . . 14
3.4 Character and Control Codes . . . 15
3.4.1 Character Set Codes . . . 15
3.4.2 Format Control Codes . . . 15

IV. REPLACEMENT PROCEDURES . . . 17
4.0 TOOLS REQUIRED . . . 17
4.1 Hammer Module . . . 18
4.2 Hammer backstop screw . . . 19
4.3 Drum motor . . . 20
4.4 Paper Feed motor . . . 21
4.5 Ribbon increment motor . . . 22
4.6 Ribbon takeup motor . . . 23
4.7 Paper puller motor . . . 24
4.8 Drum Belt . . . 25
4.9 Paper feed belts . . . 26
4.10 Ribbon increment belt . . . 27

4.11 Ribbon drive belt 27
4.12 Horizontal tractor Adjust belt 28
4.13 Paper puller belt 29
4.14 Paper feed tractor 29
4.15 Control Panel switch array 31
4.16 Power Supply 32
4.17 Paper Feed Booster 33
4.18 Paper Out Sensor 33
4.19 Paper motion sensor 34
4.20 Drum gate interlock 35
4.21 Transducer 36
4.22 Drum relay 36
4.23 Cabinet cooling fans 37
4.24 Hammerbank cooling fan(s) 38
4.25 Microprocessor CCA 48
4.26 I/O Interface Assembly 49
4.27 DC Distribution CCA 40
4.28 Bus board 40
4.29 Sensor distribution CCA 41
4.30 Hammer driver CCA 42
4.31 Control panel CCA 43
4.32 Paper puller CCA 44
4.33 Input Spline shaft 44
4.34 Output Spline shaft 46
4.35 Ribbon Increment capstan 47
4.36 Paper puller o-rings 48
4.37 Ribbon Increment idler o-rings 49

V. PRINTER ADJUSTMENTS 50
5.1 Hammer Flight Time 50
5.2 Transducer 53
5.3 Paper Out Sensor 54
5.4 Paper Motion Sensor 54
5.5 Tractor Phasing 55
5.6 Ribbon Drive Belt 55
5.7 Ribbon Take-Up belt 55
5.8 Ribbon Buffer Arm 56
5.9 Ribbon Pressure Roller 56
5.10 Paper Feed Belt 56
5.11 Paper puller belt 57

VI. TROUBLE SHOOTING 58
Character Clock Fault 59
Drum Fault 60
Hammer Error 62
Paper Jam 64
Paper Out 66
Power Fault 68

The Model 300/600 MICR Printer

I. GENERAL INFORMATION

The throughput of the printers are rated up to 600 documents per minute. The print format is 8 characters per inch and 120 columns per line. Line density is either six or eight lines per inch. Print drums with either E13B or CMC7 MICR (Magnetic Ink Character Recognition) font are available. Special total-transfer ribbons with ferrous particles mixed in the ink are used to generate the characters.

The printer is connected to either a Centronics, Dataproducts or Serial interface. ASCII or Dataproducts character codes can be used for character selection. Print images are transmitted a line at a time, and stored in a non-volatile memory on the Microprocessor board. Timing marks on the drum are used to generate image scans which the Microprocessor uses to match characters from the print image.

Vertical format is maintained with control codes which follow every line of data. These codes determine if the printer will advance paper from zero to 15 lines or the remainder of the form after printing the current image. Multiple line movement is processed by a vertical format unit which monitors paper positioning and vertical tab (channel) stops. Paper is transported by four pin-feed tractors under the control of a closed loop servo system.

1.1 Specifications

Print columns		
Model 300	56	
Model 600	120	
Character density	8 per inch	
Font	E13B or CMC7 MICR	
Line density	6 or 8 lines per inch	
Triple Interface	Centronics Parallel Dataproducts Parallel RS 232 Serial	
Ribbon	Total-transfer MICR	
Model 600 standard	190 yards x 16 inches, two-wide checks	
Checks/ribbon	100,000 approximately	
Optional	2500 feet 7.5 inches, one-wide checks	
Checks/ribbon	230,000 approximately	
Paper	MICR bond check stock	
Thickness	.004 - .007 inches	
Weight	24 lb. to 90 lb.	
Max. width	21.5" sprocket hole centers	
Power requirements		
Single phase	115 VAC +/- 10%, 15 A, 60 Hz	
Weight	Printer alone	Shipping
Model 300/600	530 lb.	660 lb.
Dimensions		
Height	48 inches	60 inches
Width	36 inches	42 inches
Depth	40 inches	53 inches
Operating environment	10°C to 30°C, 30 to 70% humidity (non-condensing)	

1.2 Options

230 VAC, 50 or 60 Hz, Single Phase
Split ribbon kit (Model 600)
Bar Code Reader

II. INSTALLATION

This section provides the installation and configuration procedures for the document printer. Included in the procedures are:

Space requirements
Unpacking/repackaging
Interface connection and configuration

2.1 Space Requirements

The following figures illustrate the space requirements for the printer. Additional space around the printer for operating and maintenance personnel should be considered.

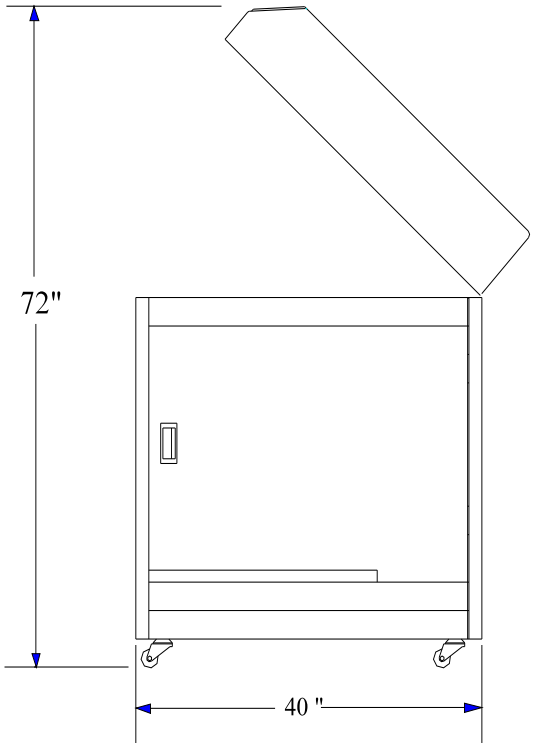

Figure 2.1 Printer Side View

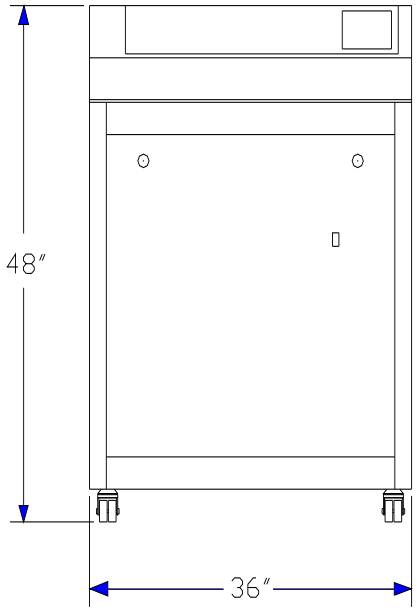

Figure 2.2 Printer Front View

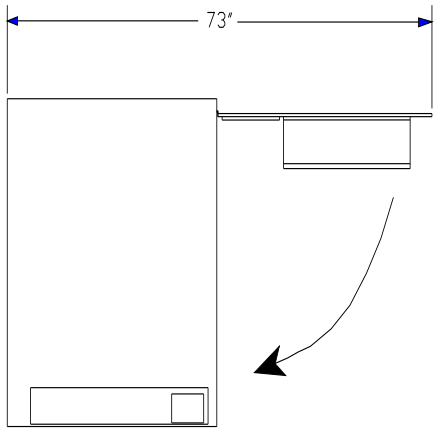

Figure 2.3 Printer Top View, Door Open

2.2 Unpacking

Save all major packing materials for repackaging should re-shipment be required. The following tools are required to unpack the printer:

Diagonal cutters
2.5 mm ball hex key wrench
3 mm ball hex key wrench
Adjustable open end wrench, or
3/4" open end wrench
9/16" open end wrench

WARNING

This procedure requires three people to properly unpack the printer.

1. Locate the pallet in a location with sufficient room to vertically remove the carton and to roll the printer down the loading ramps.

2. While holding the ramps against the packing carton, cut the shipping straps and lower the ramps to the floor.

3. Cut the remaining shipping straps.

4. Vertically remove the shipping carton and the protective vinyl bag.

5. Open the paper compartment and remove the ramp supports, mounting hardware, lifting levers, and rachet wrench.

6. With the ratchet wrench install the ramp supports to the underside of the ramps with the mounting hardware.

7. From under the pallet, loosen the nuts securing the four J-hooks and disengage the hooks from the corners of the printer cabinet.

8. Raise the ramps and remove the three lag bolts securing the printer shipping support. Return the ramps to the lowered position.

9. Place the two lifting levers across the pivot board at position 1 with three inches of the lever under the printer (mark A).

10. While two people step on the levers to raise the printer, a third person can remove the shipping support.

11. Slowly lower the printer onto the pallet.

CAUTION

To prevent injury or damage to the printer, care should be taken to prevent the printer from sliding off the second shipping support.

12. Remove the three lag bolts securing the second printer shipping support.

13. Place the two lifting levers across the pivot board at position 2 with three inches of the lever under the printer (mark A).

14. While two people step on the levers to raise the printer, a third person can remove the shipping support.

15. Slowly lower the printer onto the pallet.

16. To remove the printer, it is recommended that two people guide the printer down the ramps.

CAUTION

To prevent injury or damage to the printer, care should be taken to prevent the printer from sliding off the ramps.

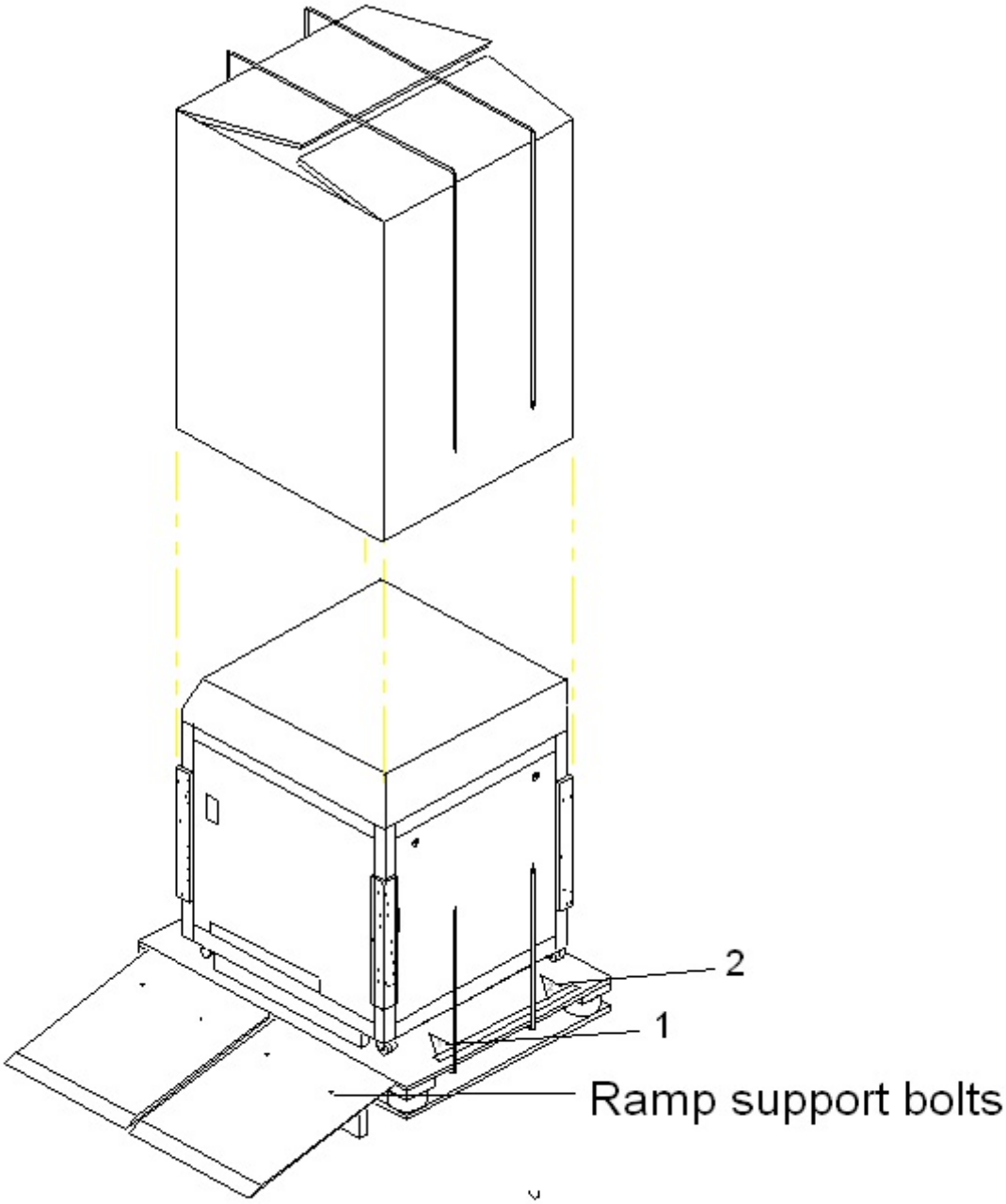

Figure 2.4 Packaging

2.3 Configuration

Perform the following procedures to configure the interface protocol:

A. Power up the printer, the unit is in the offline state.

B. Depress the PROG key to enter the program mode.

C. Use the NEXT key to advance to the program menu to the Select Interface Routine. Press the ENTER key to access the sub-menu. The NEXT key sequences the selection between Centronics parallel, Dataproducts parallel, and RS232 Serial. Use the ENTER key to select the desired interface. The interface information is stored in non-volatile memory.

D. Exit the program mode (CLEAR), and return to the on line state for normal operation (ONLINE).

2.4 Interface Cable Requirements

Centronics Parallel

Pin	Signal Description
1	Strobe*
2	Data 1
3	Data 2
4	Data 3
5	Data 4
6	Data 5
7	Data 6
8	Data 7
9	Data 8
10	ACK*
11	BUSY
12	PE
17	Chassis ground
19-30	Signal ground
31	Input Prime*
32	Fault*

* Indicates low true signal

The mating connector is a 36 pin male "Centronics".

Dataproducts Parallel

DB50

Pin	Signal Description
38	Strobe
19	Data 1
20	Data 2
1	Data 3
41	Data 4
34	Data 5
43	Data 6
36	Data 7
28	Data 8
23	Demand
21	On Line
22	Ready
30	Paper Instruction
12	+5 V
37	Strobe rtn
3	Data 1 rtn
4	Data 2 rtn
2	Data 3 rtn
40	Data 4 rtn
18	Data 5 rtn
42	Data 6 rtn
35	Data 7 rtn
44	Data 8 rtn
7	Demand rtn
6	Ready rtn
5	On Line rtn
14	Paper Instruction rtn
46	Interface Verify
45	Interface Verify rtn

The required mating connector is a DB50P (male).

Serial Interface

Pin	Signal Description
2	Transmitted Data (TxD)
3	Received Data (RxD)
7	Signal Ground
20	Data Terminal Ready (DTR)

The serial interface is configured to respond to either XON/XOFF or DTR handshaking. The character data format is eight bits, no parity, and one stop bit. The required mating connector is a DB25P (male).

III. THEORY OF OPERATION

3.1 System Block Diagram

The printer is divided into four major blocks. They are: AC/DC power distribution, microprocessor subsystem, paperfeed, and hammer subsystem.

3.2 Electronics

3.2.1 AC/DC Power Distribution

The applied AC power is filtered and then distributed to the power supply, drum motor, and paperfeed system. The power supply outputs four DC voltages which are combined to drive all logic, hammer, and relay functions. The drum motor is a geared induction motor controlled by a solid state relay. The paperfeed system is a self-contained power supply, amplifier, and servo driver.

The main power supply has four DC outputs: +5 V, +24 V, +24 V, and +12 V. These voltages are combined on the DC Distribution board to generate +5 V, +36 V, and +48 V. The +5 V drives all of the digital logic and relays. The incremental ribbon circuit uses the +36 V to drive a stepper motor. The +48 V is stored in large capacitors and provides power and high current for the hammer subsystem. An auxiliary +12 V power supply drives the ribbon take-up motor.

3.2.2 DC Distribution Board

The DC Distribution board configures the primary and secondary +24 V inputs into +48 V for the hammers, and the primary +24 V and the +12 V into +36 V for the ribbon motor. These two voltages and the +5 V are then fused and distributed to the printer. The +48 V is initially isolated from the hammers by a relay. The relay prevents the hammers from firing prior to the completion of the logic initialization routine. After the initialization is complete, the relay is engaged and each hammer is individually tested.

Other functions maintained by the DC Distribution board include the starting and stopping of the drum and ribbon take-up motors. The driver for the drum motor relay is located on the board. This signal is shared by the take-up motor. When the drum motor is turned off for a ribbon out, gate interlock open, or printer reset, the ribbon take-up motor is also turned off. This prevents the take-up motor from turning while the operator is changing a ribbon or wasting unused ribbon when the drum gate is open. The fan turn-on circuit is located on the board. After a brief delay to allow the power supplies to settle, a relay switches +24 V to the fans.

3.2.3 Bus Board

The Bus Board distributes isolated 5 V and Ground to the Microprocessor board. This reduces noise from crossing between the digital, analog, and ribbon driver circuits. The Bus board provides a location to collect: sensor inputs, hammer driver control signals, paperfeed control and status lines, ribbon incremental motor drive lines, and relay control lines.

3.2.4 Microprocessor Board

3.2.4.1 Microprocessor Design

Controlling all functions of the printer is the Microprocessor board with an 8-bit microprocessor, 16 k-bytes of programming, and 2 k-bytes of non-volatile ram. The microprocessor utilizes programmable devices to control the relays, the motors, and the control panel. These devices known as Programmable Peripheral Interfaces (PPI) have three ports each having eight bit output latch/buffers or eight bit input/buffers. Each port can be configured to send or receive data, act as control lines, or receive sensor information. Another device assisting the microprocessor is a Programmable Timer which uses the system clock, CPUCLK, to create hammer timing.

3.2.4.2 Interface Data

Interface data directed to the microprocessor is first captured by a data latch and then clocked into a PPI. An interrupt is sent to the microprocessor which then transfers the data to the print buffer in the non-volatile ram until a paperfeed control character is received. The printer scans the data buffer and matches the buffer to the drum. When true compares are made, the Hammer Driver cards are preset and hammer fire strobes are sent until the data buffer is printed. The microprocessor completes the operation by stepping the ribbon and sending the appropriate move command to the paperfeed controller.

3.2.4.3 Paperfeed System

The paperfeed system is controlled by the microprocessor with the PAP_DIR and PAPCLK* signals. PAP_DIR determines the direction of paper motion, and PAPCLK* drives the paperfeed motor the appropriate number of steps. Should the microprocessor need to stop the system due to a drape sensor input, the PAPCLK* signal is suspended during the drape short condition. Units configured with a paper puller use the signal, PAP_DIR, to activate the paper puller during forward movement.

3.2.4.4 Interlocks

Prior to printing, the microprocessor monitors all the faults/sensors: paper out, paper motion, ribbon out, drum gate interlock, power monitor, paper drape, and the character clock transducer. All faults/sensor signals are sent to the microprocessor through the PPI's. Each sensor must be in the ready state for the

printer to be in an ONLINE condition. The character clock transducer signal, CHAR CLK, links the spinning drum to the microprocessor. CHAR CLK informs the microprocessor of an indexing position from which the program can synchronize itself to drum's character pattern. After the index mark, each CHAR CLK pulse indicates the availability of the next print character.

PAPER OUT fault indicates the front tractor has run out of paper. A PAPER JAM error results when the paper motion sensor not seen a significant number of pinfeed holes at the rear tractor. DRUM GATE FAULTs occur when the gate opens while the printer is in the ONLINE state. Opening the drum gate while the printer is offline or during a ribbon out condition will not create a gate fault. POWER FAULTs are the result of the power monitor signal sensing the +48 V RELAY_ON signal going to an off state. Errors related to the character clock transducer are DRUM FAULT and CHAR CLK FAULT. The DRUM FAULT indicates that no clock pulses were received, while CHAR CLK FAULT means that too many or too few clocks were sensed.

3.2.4.5 Drape Sensor

When two printing units are running a common form in series (tandem), a length of paper is required to span the distance between the two units. This additional length of paper is known as a "drape." Care must be observed when running in the tandem mode with a drape. If the second unit prints faster than the first unit it can break the paper spanning between the two printers. One method of protection is specialized software and the other is a sensing device to monitor the physical length of paper between the two units. When the MICR printer is the second unit of this two printer system, a drape sensor can be used to maintain a minimum length. The drape sensor sends a signal via a PPI to the microprocessor which in turn interrupts the paperfeed system and prevents any paper movement until the sensor indicates the paper drape is longer. There is no visible notice that the printer is stalled due to the drape sensor.

3.2.4.6 Ribbon Drive

The ribbon drive circuit is initialized with MOTOR_RST* and enabled with the signals MOTOR_EN* and RIBEN*. To drive the motor, a series of pulses, RIBCLK*, are sent to the ribbon motor controller chip and output driver.

3.2.4.7 Analog Design

The analog portion of the microprocessor board generates the initial hardware reset, converts the hammer and character clock waveforms into a digital signals for input to the microprocessor, monitors the hammer drivers for errors, and controls the driver for the +48 V relay. The hardware reset, CPU_RST, is directed to the microprocessor to place the microprocessor in a known state and to inhibit operation while the power supplies are stabilizing. The hammer and character clock signals are digitized for use by the microprocessor. The hammer signal is used to determine the hammer flight time, the time required for the hammer to strike the drum after receiving the fire pulse. The character clock signal generates the timing for the character scans when preparing to print.0

3.2.4.8 Hammer Protection Circuit

The +48 V relay control is operated by both software and by hardware. Software can turn on and off the relay with PWRON* and PWROFF. PWRON* is used during the initial power up sequence and both functions are used when the printer is forced into the initialization routine with reset operation from the control panel. The hardware operation is utilized as an emergency control. The input signal PWRSEN images the current status of the hammers. When the hammers are idle PWRSEN is approximately 4.0 V. When hammer fires or has an open coil, the signal will drop below the 3.8 V threshold voltage. When the transition occurs the operational amplifier (op amp) turns on. When the printer is idle, the 7406 open collector device will complete the circuit with a ground to the transistor allowing the op amp signal to pass through the transistor and turn off the +48 V relay. During printing operations, the signal PWRSEN is switching and the 7406 is held inactive, thus preventing any signals from releasing the + 48 V relay.

3.2.5 Hammer Driver Board

3.2.5.1 Hammer Circuit Design

The hammer circuit based on the latching of pre-drivers with compares made between the drum and the data buffer, followed by a fire strobe which triggers the hammer movement. Timing marks on the drum clock a drum pattern generator, which the microprocessor uses when scanning the data buffer. Whenever the microprocessor has a compare, the corresponding hammer latch is set, and awaits the strobe pulse to fire the hammer. The strobe HFIRE is sent by the microprocessor through a PPI to all the pre-drivers. All latched pre-drivers activate their hammer drive pulses. The pre-driver circuits turn off the drive pulse after receiving 128 HCLK's from the Microprocessor.

3.2.5.2 Hammer Test Routine

During the printer initialization routine, each hammer is tested. The test consists of individually firing all the hammers and monitoring the common feedback signal, FLIGHT, during each hammer's activation. After the verification of each hammer's flight signal, the microprocessor initializes the hammer with the clear signal, HCLR, and continues with the next sequential hammer. Any hammers that fail are immediately identified to the operator with the display HAMR ## ERROR. By depressing the CLEAR key, the hammer test routine continues until all hammers are tested.

3.2.5.3 Hammer Flight Time Routine

The verification and adjusting of the hammers is accomplished using the same circuitry as in the initial hammer test routine, except that the flight time routine allows the hammer to impact the drum. The microprocessor determines the time each hammer flies until impact, and displays a number on the control panel that represents the flying time. Maintenance personnel can use this number to assist in the adjustment of each hammer flight time.

3.2.6 Operator's Panel

The operator's control panel consists of a 16 column display, a 23 key switch array, and two indicator LED's. One microprocessor board PPI is dedicated to the control of the display and keypad. Communication to the display requires an eight bit parallel port plus control lines, and the keypad passes through a keyboard decoder to another port. The online LED is driven from a PPI and the fault LED is a clocked output from the programmable timer.

3.2.7 Paper Puller Board

The Paper Puller board turns on the paper puller whenever a forward paperfeed command is generated from either the interface data or the control panel. The circuit enables an optocoupler which enables a ground potential to the 24 V paper puller motor. The circuit will time out and the motor stop unless another enable signal (PAP_DIR) is received.

3.3 Mechanics

3.3.1 Paperfeed System

The paperfeed motor is controlled by the microprocessor. The stepper motor receives amplified steps from the printer's microprocessor. The paper direction signal determines the appropriate clock sequence.

3.3.2 Ribbon System

The ribbon system is driven by a controller and driver on the microprocessor board. The drive motor increments a urethane coated capstan which steps the ribbon after each print cycle. The ribbon is held in place against the capstan by a shaft with idler rollers. The amount of ribbon movement is controlled by the operator. A range of 22 to 32 increment steps is available with the default at 27.

3.3.3 Paper Puller

The paperpuller consists of a series of urethane rollers driven by a 24 VDC motor whenever a forward paperfeed command is sent by the microprocessor. The signal PAP_DIR is sent to the paperpuller motor control board which in turn activates the motor and turns it off if subsequent commands are not received.

. . . . . .

3.4 Character and Control Codes

3.4.1 Character Set Codes

E13B Mode	CMC7 Symbol	ASCII Mode Hex	ASCII Mode Dec	ASCII Mode	Symbol Hex	Symbol Dec	Dataproducts
Space	Space	20	32	<sp>	20	32	<sp>
0	0	30	48	0	21	33	!
1	1	31	49	1	22	34	"
2	2	32	50	2	23	35	#
3	3	33	51	3	24	36	$
4	4	34	52	4	25	37	%
5	5	35	53	5	26	38	&
6	6	36	54	6	27	39	'
7	7	37	55	7	28	40	(
8	8	38	56	8	29	41	)
9	9	39	57	9	2A	42	*
Trans	S1	26	38	&	2B	43	+
Amount	S2	24	36	$	2C	44	,
On-Us	S3	2F	47	/	2D	45	-
Dash	S4	2D	45	-	2E	46	.
	S5	21	33	!	2F	47	/

3.4.2 Format Control Codes

Channel	Hex	Dec	Symbol	Step	Hex	Dec
1	80	128	Ç	0	90	144
2	81	129	ü	1	91	145
3	82	130	é	2	92	146
4	83	131	â	3	93	147
5	84	132	ä	4	94	148
6	85	133	à	5	95	149
7	86	134	å	6	96	150
8	87	135	ç	7	97	151
9	88	136	ê	8	98	152
10	89	137	ë	9	99	153
11	8A	138	è	10	9A	154
12	8B	139	ï	11	9B	155
				12	9C	156
				13	9D	157
				14	9E	158
				15	9F	159

Paper motion is accomplished by using the channel codes listed above. There are 12 channels that can be used as vertical tab stops. The channel code slews the paper to the next stop and each channel can have multiple stops.

NOTE

Executing a command to an unloaded channel will result in no paper movement, the same as issuing a Carriage Return.

To permit non-standard data spacing, three small-increment skip codes are available. These codes position forms at fractions of the normal 1/6 inch or 1/8 inch line spacing.

B0 = 1/24 inch
B1 = 2/24 inch
B2 = 3/24 inch

Codes are available to buffer the MICR printer when used with a text printer which runs at a slower rate. This buffering helps to maintain the paper drape length by adding a delay after paper motion. Multiple codes can be sent to the printer to accumulate the appropriate delay.

10 = 20 msec
11 = 120 msec

IV. REPLACEMENT PROCEDURES

4.0 TOOLS REQUIRED

Metric Hex Drivers1.5, 2, 2.5, 3, 4, 5, 6, 8, 10
S.A.E. Hex Drivers1/16, 5/64, 3/32, 7/64, 1/8, 9/64, 5/32, 3/16, 7/32, 1/4, 5/16, 3/8
Torque screwdriver with 7/64" ball hex tip
3/8" drive Torque wrench
3/8" drive Sockets19 mm, 22 mm
Wire cutters
Snap ring pliers

#1, #2 Philips Screwdrivers
1/4" Standard Srewdrivers

6" Adjustable wrench
Compressive Spring Gauge
Strain gauge
Digital Multi Meter with leads
.003" shim

4.1 Hammer Module replacement

TOOLS REQUIRED
2.5 mm Ball end hex driver
#2 Philips Screwdriver
Torque Screwdriver with a 7/64" tip

1. Power down the printer and remove the power cord from the power source.
2. Raise the printer top cover.
3. Release the print mechanism catch and raise the print mechanism.
4. Remove the four hammerbank mask screws and remove the hammerbank mask.
5. Determine the location of the failed hammer module and remove the appropriate paper guide, top panel and hammerbank mask support panel.
6. Unplug the hammer module from the Hammer Driver CCA.
7. Remove the screw and washers securing the module to the hammerbank frame.
8. Remove the module vertically from the hammerbank.
9. Install the hammer module vertically into the hammerbank making sure that the module is well seated on the frame.
10. Secure the module with the screw and washers removed earlier with a torque screwdriver set at 4.8 - 5.0 in-lb.

WARNING

Over tightening the hammer module screw will break the module.

11. Plug the replacement module into the Hammer Driver CCA.
12. Replace the hammerbank mask support and the top panel.
13. Install the hammerbank mask and secure with four screws.
14. Lower the print mechanism and lock.
15. Install the power cord and power up the printer.
16. Perform the flight time procedure (Procedure 5.1 in Adjustment section) on the four affected print positions.

17. Install a small quantity of check stock paper and verify the print quality with self-test.

18. Return printer to service.

4.2 Hammer backstop screw replacement

TOOLS REQUIRED
1.5 mm hex driver

1. Power down the printer and remove the power cord from the power source.

2. Disconnect the power harness from the plenum fan(s) below the hammerbank plate. Ensure that the wires are properly marked +24 (red) and G (black) for correct reassembly.

3. Turn the two quarter turn fasteners holding the plenum, and remove the plenum from the printer.

4. Remove the desired backstop screw(s).

5. To remove a backstop screw that has broken off the socket cap, call the factory for instructions.

6. Insert the new screw(s) into the backstop bar, positioning the screw(s) similar to the adjacent screws.

7. Install the power cord and power up the printer.

8. Perform the flight time procedure (see Procedure 5.1 in adjustment section for procedures) on the affected print positions.

9. Install a small quantity of check stock paper and verify the print quality with self test.

10. Power off the printer and disconnect the power cord.

11. Replace the fan plenum and reconnect the fan(s) to the power harness. Confirm the airflow direction is away from the hammerbank.

12. Close the print mechanism.

13. Attach the power cord, power up the printer, and return to service.

4.3 Drum motor replacement

TOOLS REQUIRED
2.5 mm Hex driver
5 mm Hex driver
Wire cutters
Small cable tie

1. Power down the printer and remove the power cord from the power source. Raise the print mechanism.
2. Remove the ribbon from the printer.
3. Cut the cable tie securing the wiring harness to the print mechanism.
4. Disconnect JA/PA connector.
5. Use a 2.5 mm hex driver to remove the two screws securing the belt guard to the print mechanism and remove the belt guard.
6. Use a 5 mm hex driver to remove the four screws securing the drum motor.
7. Use a #2 Philips driver to remove the four screws securing the motor to the motor mounting bracket.
8. Loosen the two set screws and remove the drive pulley from the existing motor.
9. Carefully tighten the set screws on the pulley to the motor shaft on the new motor.
10. Mount the bracket to the new motor using the four screws removed earlier.
11. Loosely install the four screws attaching the motor/base plate assembly to the print mechanism.
12. Reposition the drum belt on the drum and motor pulleys.
13. Tension the belt by lifting the motor with your hand and tighten the four screws.
14. Check the belt tension with a compressive spring gauge. The belt should deflect 3/16" when a pressure of 9 lbs. is applied to the belt midway between the pulleys.
15. Reattach the belt guard with the screws removed earlier.
16. Raise the print mechanism.
17. Reconnect the JA/PA connectors.

18. Replace the cable tie.

19. Replace the ribbon.

20. Lower the print mechanism until it locks completely.

21. Reconnect the power cord, power up the printer check for proper motor operation and return to service.

4.4 Paper Feed motor replacement

TOOLS REQUIRED
2.5 mm Hex driver
4 mm Hex driver
5 mm Hex driver
Small screwdriver
Drumgate safety pin
Compressive spring gauge

1. Power down the printer and remove the power cord from the power source.

2. Remove the Electronics assembly access cover.

3. Disconnect the six wires from the paperfeed motor to the terminal block of the paperfeed booster. Ensure that the wires are properly labeled as a reference.

4. Remove the screws securing the belt guard and remove the guard.

5. Use a 5 mm hex driver to loosen the screw in the rear belt tension roller, swing it out of the way, and remove the belt.

WARNING
Do not remove belt guard with printer connected to the power source.

6. Raise the drumgate to the maintenance position and secure with the safetly pin through the gate hinge and under the gate interlock block.

7. Open the paper access door.

8. Loosen the two screws securing the circuit breaker to the front panel.

9. Remove the front panel.

10. Loosen the lock of a threaded link securing a counterbalance spring to a turnbuckle.

11. From the front of the printer, grasp the base of the spring, pull towards the turnbuckle, and disengage from the threaded link. Repeat for the second link and spring.

12. With a 5 mm hex wrench, remove the three screws securing the paperfeed motor mounting plate to the mechanics frame.

NOTE
Support the motor during this procedure to prevent the motor from falling.

13. Remove the four screws securing the motor assembly to the mounting plate.

14. Install the replacement motor on the mounting plate with the harness exit referenced down when the motor is installed.

15. Install the motor mounting plate to the mechanics frame.

16. Route the drumgate counterbalance cables over the pulleys on the paperfeed motor mounting plate and hook the threaded links onto the turnbuckles. Close the locks of the threaded links.

17. Raise the drumgate slightly and emove the safety pin.

18. Install the paperfeed belt and tension with the idler pulley.

19. Connect the motor harness to the paperfeed booster terminal block. If the harness is not labeled, compare to the motor just removed or the system wiring diagram.

20. Install the belt guard.

21. Install the front and rear cabinet covers.

22. Mount the circuit breaker to the front cabinet cover.

23. Close the paper access cover.

24. Attch the power cord, power up the printer, ensure the proper operation of the paperfeed system, and return to normal operation.

4.5 Ribbon increment motor replacement

TOOLS REQUIRED
3 mm Hex driver
1/16" Hex driver
Wire cutters
Cable tie
Compressive spring gauge

1. Power down the printer and remove the power cord from the power source. Raise the print mechanism

2. Remove the ribbon from the printer.

3. Disconnect the motor harness connector JC/PC.

4. Use a 3 mm hex driver to loosen the screw securing the belt tension roller and remove the belt.

5. Cut the cable tie attaching the wiring harness to the anchor plate.

6. Use a 3 mm hex driver to remove the three screws securing the motor to the print mechanism.

7. Use a 1/16" hex driver to loosen the two set screws securing the pulley to the motor shaft, and remove the pulley.

8. Mount the pulley on the new motor shaft and tighten both set screws.

9. Place the belt over the motor pulley and remount the motor assembly to the bridge. Tighten the three screws.

10. Check the belt tension with a compressive spring gauge. The belt should deflect 1/16" when a pressure of 3 lbs. is applied to the belt midway between the pulleys. Tighten the adjuster screw.

11. Replace the cable tie securing the wiring harness to the anchor plate.

12. Reconnect the wiring harness JC/PC to the motor.

13. Replace the ribbon.

14. Reconnect the printer to its power source. Test the motor for proper operation by running continuous self test. Check the used ribbon for character overprinting.

15. Close the printer cover and return to service.

4.6 Ribbon takeup motor replacement

TOOLS REQUIRED
3 mm Hex driver
3/32" Hex driver
1/16" Hex driver
4" Cable tie
Wire cutters

1. Power down the printer and remove the power cord from the power source. Raise the print mechanism

2. Remove the ribbon from the printer.

3. Disconnect the power coupling JB/PB and remove the motor.

4. Cut the cable tie from the anchor plate.

5. Use a 3 mm hex driver to remove the two screws securing the ribbon takeup motor and remove the motor from the printer.

6. Use a 1/16" hex driver to loosen the two set screws on the motor pulley and remove the pulley for use on the replacement motor.

7. Use a 3/32" hex driver to remove the three screws connecting the motor to the mounting plate.

8. Mount the new motor to the mounting plate.

9. Mount the takeup pulley to the new motor shaft.

10. Reposition the belt over the pulley and loosely mount the takeup assembly to its mounting plate using the screws removed earlier.

11. Using a compressive spring gauge, tension the belt. The belt should deflect 1/16" when a pressure of 3 lbs. is applied to the belt midway between the pulleys. Tighten the screws.

12. Reposition the wiring harness and secure to the anchor plate with a new cable tie.

13. Reconnect the power connector to the takeup motor.

14. Replace the ribbon.

15. Reconnect the printer to power source. Test printer for proper takeup operation by pressing ribbon step button on the control panel and observing the takeup roller.

16. Close the printer and return to service.

4.7 Paper puller motor replacement

TOOLS REQUIRED
3 mm Hex key
5/64" Hex key
Compressive spring gauge

1. Power down the printer and remove the power cord from the power ource. Raise the print mechanism.

2. Open the paper exit door. Remove the back cover from the printer to expose the electronics bay.

3. Using a 3 mm hex key remove the screws mounting the motor to the mount plate. Confirm that the leads are properly marked and disconnect the leads from the paper puller timeout board (E12, 13, 14) and remove the motor.

4. Using a 5/64“ hex key remove the pulley from the motor assembly and attach it to the new motor shaft.

5. Place the new motor into the mounting plate. Reattach it hand tight using the screws removed earlier. Place belt over the pulley. Rotate the motor housing to tension the belt.

6. Check belt tension using the compressive spring gauge. The belt should deflect 1/16" with 3 lbs of force is applied midway between the pulleys. Tighten the screws.

7. Reconnect the wiring harness to the paper puller timeout board.

8. Power up printer to test the paper puller for operation.

9. If it functions, power down the printer and disconnect the power source.

10. Reattach all panels removed.

11. Reattach the printer to the power source and return the printer to service.

4.8 Drum Belt replacement

TOOLS REQUIRED
5 mm Hex driver
3 mm Hex driver
2.5 mm Hex driver
Compressive spring gauge

1. Power down the printer. Disconnect the printer from the power source.

2. Using the 2.5 mm hex driver remove the screws securing the drum belt guard to the bridge. Remove the guard.

3. Use a 5 mm hex driver to loosen the four screws securing the drum motor to the mounting block lower the drum motor.

4. Remove the belt from the motor pulley. Remove the belt from the drum pulley.

5. Place the new belt on the drum and motor pulleys.

6. Lift the drum motor to tension the drum belt. Tighten the drum motor screws. Using a compressive spring gauge, tension the belt. The belt should deflect 3/16" when a pressure of 9 lbs. is applied to the belt midway between the pulleys. Tighten the screws.

7. Replace the drum belt guard with the two screws removed earlier.

8. Reconnect the printer to the power source and power up printer.

9. Test printer by continuous printing test pattern and checking for faults.

10. Return the printer to service.

4.9 Paper feed belts replacement

TOOLS REQUIRED
5 mm Hex driver
Compressive spring gauge

1. Power down the printer and remove the power cord from the power source.

2. Remove the screws securing the belt guard and remove the belt guard.

3. Use a 5 mm hex driver to loosen the screw in the rear belt tension roller, swing it out of the way, and remove the belt.

4. Install the new paperfeed belt and tension with the idler pulley.

5. Install the belt guard and secure with the screws removed earlier.

6. Reconnect printer to power source and test the printer by advancing paper both by line and by form and printing fixed pattern at 6 lpi for two pages. Check printout for consistent line spacing.

7. Return the printer to service.

4.10 Ribbon increment belt replacement

TOOLS REQUIRED
Scissors to cut the ribbon
3 mm hex driver
1/16" hex driver
Compressive spring gauge

1. Power down the printer and remove the power cord from the power source. Raise the print mechanism.

2. Cut the ribbon and remove it from the printer.

3. Using the 3 mm hex driver loosen ribbon belt tension roller.

4. Slip the belt off the tension roller and motor pulley.

5. Rotate the increment capstan until the two set screw holes are exposed. Use a 1/16" hex driver to loosen the set screw on the pulley end. Slide the roller toward the pulley until the pin on the latch end of the roller clears the print mechanism and remove the roller from the printer. Use care not to lose the white nylon washer from the roller ends.

6. Using the 3 mm hex driver loosen the set screw on the print mechanism holding the support bar on the latch end of the bridge. Slide the bar out the front of the bridge 1-2" and remove the existing belt.

7. Place the new belt over the end of the support shaft and reinstall the support shaft. Tighten the set screw.

8. Replace the increment capstan, pulley end first inside the new belt and seat the pin into the bearing port on the bridge end piece. Align the pin at the opposite end of the shaft with its bearing port. While holding the pulley head expand the roller until the other pin seats inside the bearing port. (Note: make sure that the increment capstan has a white nylon washer on each end against the bearing). Tighten the set screw in alignment with the flat key pad on the pulley shaft.

9. Place the belt over the motor pulley and then the tension pulley.

10. Using a compressive spring gauge tension the belt. The belt should deflect 1/16" when a pressure of 3 lbs. is applied to the belt midway between the pulleys. Tighten the tension roller screw.

11. Replace the ribbon.

12. Lower the print mechanism until it locks.

13. Reconnect the printer to its power source. Test the motor for proper operation by running continuous self test. Check the used ribbon for character overprinting. Return the printer to service.

4.11 Ribbon drive belt replacement

TOOLS REQUIRED
3 mm hex driver
Compressive spring gauge

1. Disconnect the printer from the power source. Remove the ribbon from the printer.

2. Use a 3 mm hex driver to remove the two screws securing the ribbon motor to the mounting bracket. Lower the ribbon motor. Remove the belt.

3. Place new belt onto the ribbon mandrel pulley.

4. Place the ribbon motor pulley inside the belt. Mount the motor to the motor bracket using the two screws removed earlier.

5. Tension belt by pressing in on the motor plate. Check the belt tension with a the spring gauge. The belt should deflect 1/16" with a force of 3 lbs is applied to the belt midway between the pulleys. Tighten the screws.

6. Mount the ribbon onto the printer.

7. Reconnect the printer to the power source. Power up the printer. Check the ribbon for proper operation by advancing the ribbon using the ribbon button on the control panel. The motor must not slip inside the belt.

8. Return the printer to service.

4.12 Horizontal tractor Adjust belt replacement

TOOLS REQUIRED
snap-ring pliers

1. Power down the printer and disconnect the printer from the power source.

WARNING
Circuit breaker is located on the front panel. Do not remove front panel with the printer connected to the power source

2. Disengage both of the front tractor locks.

3. Unscrew the front tractor support shaft from the horizontal adjusting knob.

4. Using snap-ring pliers remove the snap-ring securing the front horizontal adjusting knob.

5. Remove the knob from the rail.

6. Install a new belt over the rear knob and slide the knob with the belt engaged into the rail.

7. Reinstall the snap-ring.

8. Screw the tractor support shaft completely into the adjustment knob.

9. Loosen the rear tractor locks and verify the rear support shaft is fully engaged with its adjustment knob.

10. Verify proper paper position and lock all the tractor locks. Reconnect the printer to the power source. Return the printer to service.

4.13 Paper puller belt replacement

TOOLS REQUIRED
3 mm hex driver
Compressive spring gauge

1. Power down the printer and remove the power cord from the power source.
2. Remove the paper exit panel.
3. Use a 3 mm hex driver to loosen the two mounting screws on the paper puller motor.
4. Remove existing belt.
5. Install new belt.
6. Rotate the motor to tension belt. Check the belt tension with the spring gauge, the belt should deflect 1/16" when a force of 3 lbs is applied to the belt midway between the pulleys. Tighten the screws.
7. Reconnect the printer to the power source.
8. Power up printer and verify proper operation of the paper puller system.
9. Power down the printer. Disconnect the printer from the power source.
10. Replace the paper exit panel.
11. Reconnect the printer to the power source.
12. Return printer to service.

4.14 Paper feed tractor replacement

TOOLS REQUIRED
2.5 mm hex driver
3 mm hex driver
4 mm hex driver
5 mm hex driver
Compressive spring gauge

1. Power down the printer and remove the power cord from the power source.

WARNING

The main circuit breaker is located on the front panel. Do not remove the front panel while the power source is connected.

2. Remove the rear panel from the printer.

3. Remove the screws that attach the belt guard to the printer, and remove the belt guard.

4. Use a 5 mm hex driver to loosen the tension roller, rotate it away from the tractor drive belt, and remove the paperfeed belt.

5. Loosen both tractor lock knobs on the appropriate side.

6. Unthread the horizontal adjust knob from its threaded tractor support shaft.

7. Use a 2.5 mm hex driver to remove the two screws holding the spline shaft retaining plate on the printer frame.

8. Slide the spline shaft and the tractor support shaft to the right (rear) enough to remove the tractors from the shafts.

9. **Input tractor only**. Use a 1/16" hex driver to loosen the set screw in the vertical tension knob and slide the knob off the spline shaft.

10. Slide off the tractor(s) being replaced.

11. Slide the replacement tractor(s) onto the support bar.

12. Slide the spline shaft through the tractors. Verify the alignment of the tractor pins.

CAUTION

Misalignment of pins will cause paper damage.

13. **Input tractor only**. Slide the vertical tension knob onto the spline shaft.

14. Install the spline shaft bearings into the bearing housing and secure with the retaining plate.

15. Install the tractor support bar and fully thread it into the adjustment knob.

16. **Input tractor only**. Secure the vertical adjustment knob with a 1/16" hex driver leaving a 1/10" gap between the knob and the rail.

17. Install the paperfeed belt and tension with the rear idler pulley.

18. Mount the belt guard with the screws removed earlier.

19. Reconnect the printer to the power source and power up the printer.

WARNING

The main circuit breaker is located on the front panel. Check that the circuit breaker area on the front panel is clear of any tools before connecting to the power source.

20. Test the printer for proper operation by feeding the paper with the control panel.

21. Disconnect the printer from the power source.

22. Replace the rear panel.

23. Reconnect the printer to the power source. Return the printer to service.

4.15 Control Panel switch array replacement

TOOLS REQUIRED
2.5 mm Hex driver

1. Power down the printer and disconnect from the power source.

2. Use a 2.5 mm hex driver to remove the four screws securing the control panel housing.

3. Carefully remove the housing and disengage the switch array harness from the control panel CCA on the left side of the assembly.

4. Peel off the existing switch array from the control panel housing making certain that no residue remains.

5. Determine the proper location for the new switch array.

6. Peel off the protective material from the new switch array and position on the housing. Caution should be taken to align the LED holes and the 16 column display aperture.

7. Connect the new array harness to the circuit card assembly.

8. Position the assembly on the control panel bracket and lightly tighten the four mounting screws.

9. Adjust the housing for good fit with the top cover down and then fully tighten the screws.

10. Power up the printer, verify the control panel functions properly, and return the printer to service.

4.16 Power Supply replacement

TOOLS REQUIRED
#2 Philips screwdriver
3 mm hex driver
Wire cutters
2*4" Cable ties
AC-DC Voltmeter

1. Power down the printer and remove the power cord from the power source.
2. Remove the back panel from the printer .
3. Verify that the eight DC voltage leads are properly labeled and disconnect them from the power supply outputs.
4. Remove the safety screen covering the line feeds. Disconnect the line, neutral and ground feeds to the power supply.
5. Remove the two 3 mm hex screws securing the power supply to the carrier base. Remove the power supply.
6. Cut the two cable ties securing the power harness to the back of the power supply.
7. Reconnect the line feeds to the new supply.
8. Replace the two wire ties to anchor points at the rear of the supply.
9. Replace the safety screen.
10. Loosely attach the power supply to the base plate with one screw at the top.
11. Reconnect the printer to the power source. Power up the printer. Use the voltmeter to check the outputs of the power supply. Adjust any outputs that require it. Disconnect the printer from the power source.
12. Reconnect the 8 output lines.
13. Reattach the bottom screw to the base plate and tighten both.
14. Replace the rear access panel.
15. Attach the power cord, power up the printer, verify proper operation, and return to service.

4.17 Paper Feed Booster replacement

TOOLS REQUIRED
3 mm hex key
1/4" Standard screwdriver

1. Power down the printer and remove the power cord from the power source.
2. Using a 3 mm hex key remove the rear access panel from the printer.
3. Verify the connectors are properly marked and disconnect the control/logic harnesses from the paper feed controller.
4. Remove the mounting screws which hold the booster chassis plate and remove the plate with the booster from the printer.
5. Verify that the leads are properly marked and disconnect the power feeds to the booster. Verify that the motor leads are properly marked and disconnect from the terminal block of the booster.
6. Loosen the three screws securing the booster to the mounting plate and remove the booster.
7. Mount the new booster onto the plate and secure with the screws removed earlier.
8. Reconnect the power feeds and the motor leads to the booster.
9. Position the plate in the printer and secure with the mounting screws.
10. Reattach the control/logic harnesses to the controller.
11. Replace the rear access panel.
12. Attach the power cord, power up the printer, verify paper feed operation, and return to service.

4.18 Paper Out Sensor replacement

TOOLS REQUIRED
3 mm Hex driver
2.5 mm Hex driver

1. Power down the printer and remove the power cord from the power source.
2. Remove the rear panel.
3. Disconnect the paper out sensor harness from JB3 of the Sensor Distribution CCA and release all harness restraints.

4. Remove the two screws securing the sensor to the paper out bracket and lift the sensor away from the printer.

5. Install the new sensor and lightly tighten the screws.

6. Route the new harness and connect to the Sensor Distribution CCA.

7. Power up the printer.

8. Install a piece of paper in the tractor with the paper out sensor.

9. Adjust the sensor until it is approximately 0.2 inches below the paper and the sensor "on" indicator is illuminated. Test the adjustment by removing the paper and the indicator should go out. Tighten the mounting screws.

10. Turn off the printer.

11. Carefully route the harness and install the rear panel.

12. Attach the power cord, power up the printer, verify proper paper out sensor operation, and return to service.

4.19 Paper motion sensor replacement

TOOLS REQUIRED
#1 Philips screwdriver
3 mm Hex driver
2.5 mm Hex driver

1. Power down the printer and remove the power cord from the power source.

2. Remove the rear access panel.

3. Disconnect the paper motion sensor harness from JB1 of the Sensor Distribution CCA and release all harness restraints.

4. Use a #1 Philips screwdriver to remove the screw securing the paper motion bracket to the left input tractor. Remove the bracket / sensor assembly from the printer.

5. Use a 2.5 mm hex driver to remove the two screws securing the sensor to the paper motion bracket and remove the sensor.

6. Install the new sensor and lightly tighten the screws.

7. Adjust the sensors position on the bracket to .08 ".

8. Mount the assembly into the left input tractor using the screw removed earlier.

9. Route the new harness and connect to the Sensor Distribution CCA.

10. Reconnect the printer to the power source and power up the printer.

11. Install a piece of paper in the tractor with the paper motion sensor.

12. Adjust the sensor until it is approximately 0.2 inches below the paper and the sensor "on" indicator is illuminated. Test the adjustment by removing the paper and the indicator should go out. Tighten the mounting screws.

13. Turn off the printer and disconnect the printer from the power source.

14. Carefully route the harness and install the rear panel.

15. Attach the power cord, power up the printer, verify proper paper motion sensor operation, and return to service.

4.20 Drum gate interlock replacement

TOOLS REQUIRED
3 mm hex key
#1 Philips screwdriver

1. Power down the printer and remove the power cord from the power source. Remove the rear panel to access the electronics bay.

2. Use a 3 mm hex driver to remove the two screws securing the Drum Gate Interlock switch to the frame.

3. Disconnect the PB2 connector from the Sensor Distribution board. Push cable through the cable port into the printers center.

4. Lift the sensor assembly out of the printer.

5. Using the #1 Philips screwdriver remove the screw holding the sensor to the housing and remove the sensor.

6. Place the new sensor into the housing and hand tighten the screw removed earlier.

7. Reroute the cable of the interlock assembly back through the printer frame.

8. Mount the interlock and secure with the screws removed earlier.

9. Reconnect the cable to JB2 on the Sensor Distribution board.

10. Reconnect the printer to the power source. Test sensor by lowering and raising the print mechanism and observing the control panel.

11. Disconnect the printer from the power source. Replace the rear panel. Lower the print mechanism until it locks.

12. Reconnect the printer to the power source. Return the printer to service.

4.21 Transducer replacement

TOOLS REQUIRED
3 mm hex key
.003" Shim
20 Mhz Oscilloscope with leads

1. Power down the printer and remove the power cord from the power source.

2. Remove the ribbon from the printer. Remove the drum guard.

3. Using the 3 mm hex key loosen the hex screw retaining the transducer. Lift the transducer from the mounting bracket. Disconnect the transducer JD/PD. Remove the transducer from the printer.

4. Place .003 shim over index marks on drum. Place the new transducer into bracket down to the shim. Tighten the screw to retain the sensor. Remove the shims and rotate the drum by hand to assure that the drum and sensor do not touch. Reconnect JD/PD.

NOTE:
If the drum and the transducer come into contact with the drum turning, serious damage will be done to the transducer and/or drum

5. Replacing the transducer requires you to perform the complete adjustment procedure 5.2.

6. Replace ribbon.

7. Return printer to service.

4.22 Drum relay replacement

TOOLS REQUIRED
2.5 mm Hex driver
3 mm Hex driver

1. Power down the printer and remove the power cord from the power source. Remove the printer back panel.

2. Locate the drum relay on the power supply carrier plate.

3. Verify all connections are properly labeled.

4. Remove all four connectors to the relay. Remove the two screws securing the relay to the panel and remove the relay.

5. Reattach the new relay using the two screws. Reconnect the four wiring connections to the relay terminals.

WARNING

Line voltage is present at the drum relay. Do not connect or disconnect these leads with the printer connected to the power source

6. Reattach the printer to the power source and power up the printer. Check the drum on startup for proper operation.

7. Disconnect the printer from the power source. Replace the rear panel. Reconnect the printer to the power source. Return the printer to service.

4.23 Cabinet cooling fans replacement

TOOLS REQUIRED
3 mm Hex driver

1. Power down the printer and remove the power cord from the power source. Remove the printer back panel.

2. Remove air filter from beneath the twin fan pack. Remove the three screws securing the fan pack to the base plate of the printer.

3. Disconnect the connections for the fan(s) at the DC Distribution board.

4. Remove the fan pack from the printer. Remove the fan(s) from the carrier plate. Reinstall the new fan(s) on the carrier plate. Confirm the airflow direction is into the cabinet.

5. Remount the carrier to the base pan.

6. Replace the filter.

7. Reconnect the wiring headers to the DC Distribution board.

8. Reconnect the printer to the power source and power up the printer. Check the fans for proper operation. Disconnect the printer from the power source.

9. Replace the rear panel. Reconnect the printer to the power source. Return the printer to service.

4.24 Hammerbank cooling fan(s) replacement

TOOLS REQUIRED
7/64" nut driver

1. Power down the printer and remove the power cord from the power source.

2. Open the printer input door. Locate the plenum plate under the hammer bank. Remove the plenum cover. Disconnect the fan wiring from the power harness.

3. Remove the screws holding the fan(s) to the plenum cover.

4. Remount the new fan(s) to the plenum cover with the screws removed earlier. Confirm the airflow direction is away from the hammerbank.

5. Remount the plenum cover to the bottom of the hammerbank. Reconnect the fan(s) to the power harness.

6. Reconnect the printer to the power source and power up the printer. Check the hammerbank cooling fans for proper operation. Disconnect the printer from the power source.

7. Close the printer input door. Reconnect the printer to the power source. Return the printer to service.

4.25 Microprocessor CCA replacement

TOOLS REQUIRED
3 mm Hex driver

1. Power down the printer and remove the power cord from the power source.

2. Remove the rear cover from the printer.

3. Disconnect the three headers P2, P6 and P16

4. Grasp the circuit card with both hands and gently withdraw it from the card cage.

NOTE
If new board has appropriate EPROM installed skip step #5

5. Remove the EPROM from the socket carefully so as not to bend the pins. Place the EPROM into the socket on the new microprocessor board watching the polarity key for proper alignment.

6. Place the replacement microprocessor card into the card guides located in the side of the card cage. Insert the card to the bottom of

the slot and gently press it into the edge connectors. Visually check that the card is fully seated.

7. Reconnect P2, P6 and P16.

8. Reconnect the printer to the power source and power up the printer. Check the printer for proper operation. Disconnect the printer from the power source.

9. Replace rear panel. Reconnect the printer to the power source. Return the printer to service.

4.26 I/O Interface Assembly replacement

TOOLS REQUIRED
3 mm hex driver
2.5 mm hex driver

1. Power down the printer and remove the power cord from the power source. Remove the printer back panel.

2. Disconnect the P2 connector from the microprocessor card.

3. Disconnect the interface cable.

4. Using the 2.5 mm hex driver remove the four screws located in the corners of I/O interface card and remove the interface.

5. Place the new interface card into printer pan and reattach with screws. Reconnect the P2 connector to the microprocessor card.

6. Install interface cable.

7. Reconnect the printer to power source. Connect the printer to its communication cable. Mount a small amount of paper into the printer tractors. Power up the printer.

8. Confirm proper operation of the I/O interface card by sending a small job to the printer

9. Replace the back panel. Reconnect the printer to the power source. Return the printer to service.

4.27 DC Distribution CCA replacement

TOOLS REQUIRED
3 mm hex driver
#1 Philips screwdriver

1. Power down the printer and remove the power cord from the power source. Remove the printer back panel.

2. Check that the leads are all properly labeled before removing. Carefully remove the quick connect terminals watching their labels for reassembly. Disconnect J14 and J45 connectors.

3. Using the #1 Philips screwdriver remove the four screws in the corners of the distribution board and remove the board.

4. Remount the new board with all four screws.

5. Reconnect J14 and J45.

6. Reconnect the lugs to the board confirm each connector is on its proper terminal before powering up the printer.

7. Reconnect the printer to power source and power up the printer. Verify proper operation with short print run from console. Disconnect the printer from the power source.

8. Replace the printer back panel. Reconnect the printer to the power source. Return the printer to service.

4.28 Bus board replacement

TOOLS REQUIRED
3 mm hex driver

1. Power down the printer and remove the power cord from the power source. Remove the printer back panel.

2. Disconnect the three connectors from the Microprocessor board and remove the Microprocessor board.

3. Verify that all connectors are properly labeled. Disconnect the P7, P8, P9, P10, P11, P12, and P13 from the bus board. Remove the power connectors from terminals E3, E6, and E7.

4. Using the 3 mm hex driver remove the six screws securing the cage to the central panel and remove the card cage. Remove the bus board from the printer.

5. Place the new bus board into the printer. Reconnect the P7, P8, P9, P10, P11, P12 and P13 connectors. Reconnect the E3, E6, E7 and power connectors.

6. Remount the card cage with the card guides lined up with the edge connectors on the bus board. Reinstall the six screws removed earlier.

7. Reinstall the Microprocessor board.

8. Reconnect the three connectors to the Microprocessor board.

9. Reconnect the printer to the power source and power up. Check for proper operation by running a test job from the console.

10. Disconnect the power source. Replace the back panel. Reconnect the printer to the power source. Return the printer to service.

4.29 Sensor distribution CCA replacement

TOOLS REQUIRED
#1 Philips Screwdriver
3 mm hex driver

1. Power down the printer and remove the power cord from the power source. Remove the back panel from the printer.

2. Locate the sensor distribution board on the back wall of the electronics bay.

3. Verify all leads are properly marked and disconnect the sensor leads JA1, JB1, JB2, JB3, and JC1.

4. Disconnect the header J17.

5. Remove the four screws securing the card to the back panel and remove card.

6. Remount the new card with the four screws previously removed.

7. Reconnect J17, JA1, JB1, JB2, JB3 and JC1.

NOTE
Be sure to confirm that the transducer ground lead has good contact to ground

8. Reconnect the printer to the power source and power up the printer.

9. Verify proper sensor operation by running a test from the control panel.

10. Disconnect the power source. Replace the back panel on the printer.

11. Reconnect the printer to the power source. Return the printer to service.

4.30 Hammer driver CCA replacement

TOOLS REQUIRED
3 mm hex driver
2.5 mm hex driver
DMM

1. Power down the printer and disconnect it from the power source.

2. Determine which CCA to replace :
   Odd = Front (300/600), Even = Rear (600 Only)

3. FRONT Remove the paper entry guide and the top panel and slide out from beneath the tractors.

   REAR Remove the paper exit panel. Locate the Hammer driver board in the vertical mounting.

4. Verify the power connections are properly labeled and disconnect them.

5. Disconnect the hammer logic and flight time harnesses.

6. Disconnect the hammer module connectors. Verify that the connectors are properly labeled prior to removing them.

7. Remove the six screws securing the hammer board to the mounting plate and remove the board.

8. Verify that the configuration switches (SW 1) on the new board match those on the old board. Install the new board using the six screws removed earlier.

	56 Col.	120 Col. Odd	120 Col. Even
SW1-1	OFF	ON	ON
SW1-2	OFF	OFF	ON
SW1-3	OFF	OFF	ON
SW1-4	OFF	OFF	OFF

9. Plug the hammer modules into the board according to their labels.

10. Connect the logic harness.

WARNING

If the printer is powered up without the logic harness installed severe damage will be done to the printer

11. Connect the power and flight time harnesses.

12. Use the DMM to check for VCL voltage at the bottom of C56. Adjust with the potentiometer at R88 to the proper voltage (1.43-1.45 VDC). Both driver boards must match.

13. Place several sheets of paper between the print mechanism and the hammer bank to protect the printer before powering up the first time following the above procedure.

14. Attach the printer to the power supply and power up the printer. Verify proper clearance of the paper pad. If the paper is pinched power down the printer and review the preceding instruction (#10).

15. Remove the pad.

16. FRONT Install the top cover under the tractors and the paper entry guide using the screws removed earlier.

    REAR Attach the paper exit panel.

17. Verify proper operation of the printer with self test sliding pattern to check hammer sequencing.

18. Return printer to service.

4.31 Control panel CCA replacement

TOOLS REQUIRED
3 mm hex driver

1. Power down the printer and remove the power cord from the power source.

2. Remove the four screws holding the control panel.

3. Disconnect the control panel harness from J15 of the Control Panel CCA and remove the control panel

4. Remove the four screws that secure the CCA to the underside of the control panel housing.

5. Carefully disengage the switch array harness from the control panel circuit card on the left side of the assembly.

6. Plug the switch array harness into the new Control Panel CCA header.

7. Position the new CCA in the housing and fasten with four screws.

8. Attach the control panel harness to J15 of the new CCA.

9. Position the assembly on the control panel bracket and lightly tighten the four mounting screws.

10. Adjust the housing for good fit with the top cover and then fully tighten the screws.

11. Power up the printer, verify the control panel functions properly, and return the printer to service.

4.32 Paper puller CCA replacement

TOOLS REQUIRED
#1 Philips Screwdriver
3 mm hex driver

1. Power down the printer and remove the power cord from the power source. Remove the printer back panel.
2. Locate the paper puller control CCA on the back wall of the electronics bay.
3. Disconnect P30, E12 (both connectors), E13 and E14 from the terminals on lower edge of card. Disconnect the ground lug from the mounting screw.
4. Remove the four screws that attach the card to the back panel remove the card.
5. Position the new card over the mounting holes. Remount the card to the back panel using the screws removed earlier. Reconnect the ground lug to the mounting screw.
6. Reconnect E12 (both connectors), E13 and E14 to their terminals on the card. Reconnect P30 to its header. Reconnect the ground lug to the mounting screw.
7. Reconnect the printer to the power source. Power up the printer and check the paper puller for proper operation. Disconnect the printer from the power source.
8. Replace the back panel. Reconnect the printer to the power source. Return the printer to service.

4.33 Input Spline shaft replacement

TOOLS REQUIRED
2.5 mm hex driver
5 mm hex driver
1/16" hex driver

1. Power down the printer and remove the power cord from the power source. Remove the rear panel from the printer.
2. Loosen both tractor locks on the side needing replacement. Slide the tractors to the center of the bar.

3. At the rear of the printer, remove the screws securing the belt guard and remove the guard.

WARNING

Do not remove the belt guard while the printer is connected to the power source

4. Use a 5 mm hex driver to loosen the tension roller, rotate it away from the tractor drive belt, and remove the paperfeed belt.

5. Loosen both tractor lock knobs on the appropriate side.

6. Unthread the horizontal adjust knob from its threaded tractor support shaft.

7. Use a 2.5 mm hex driver to remove the two screws holding the spline shaft retaining plate on the printer frame.

8. Slide the spline shaft to the right (rear).

9. Use a 1/16" hex driver to loosen the set screw in the vertical tension knob and slide the knob off the spline shaft. Remove clutch knob and pulley.

10. Slide the spline shaft through the tractors. Verify the alignment of the tractor pins.

CAUTION

Misalignment of pins will cause paper damage.

11. Slide the vertical tension knob onto the spline shaft.

12. Install the spline shaft bearings into the bearing housing and secure with the retaining plate.

13. Secure the vertical adjustment knob with a 1/16" hex driver leaving a 1/10" gap between the knob and the rail.

14. Install the paperfeed belt and tension with the rear idler pulley.

15. Mount the belt guard with the screws removed earlier.

16. Reconnect the printer to the power source and power up the printer.

WARNING

The main circuit breaker is located on the front panel. Check that the circuit breaker area on the front panel is clear of any tools before connecting to the power source.

17. Test the printer for proper operation by feeding the paper with the control panel.

18. Disconnect the printer from the power source.

19. Replace the rear panel.

20. Reconnect the printer to the power source. Return the printer to service.

4.34 Output Spline shaft replacement

TOOLS REQUIRED
2.5 mm hex driver
5 mm hex driver
9/64" hex driver

1. Power down the printer and remove the power cord from the power source. Remove the rear panel from the printer.

2. Loosen both tractor locks on the side needing replacement. Slide the tractors to the center of the bar.

3. At the rear of the printer, remove the screws securing the belt guard and remove the guard.

WARNING
Do not remove the belt guard while the printer is connected to the power source

4. Use a 5 mm hex driver to loosen the tension roller, rotate it away from the tractor drive belt, and remove the paperfeed belt.

5. Loosen both tractor lock knobs on the appropriate side.

6. Unthread the horizontal adjust knob from its threaded tractor support shaft.

7. Use a 2.5 mm hex driver to remove the two screws holding the spline shaft retaining plate on the printer frame.

8. Slide the spline shaft to the right (rear).

9. Use a 9/64" hex driver and remove the rear tractor collar clamp and pulley.

10. Slide the replacement spline shaft through the tractors. Verify the alignment of the tractor pins.

CAUTION
Misalignment of pins will cause paper damage.

11. Install the rear drive pulley and collar clamp.

12. Install the spline shaft bearings into the bearing housing and secure with the retaining plate.

13. Install the paperfeed belt and tension with the rear idler pulley.

14. Mount the belt guard with the screws removed earlier.

15. Reconnect the printer to the power source and power up the printer.

WARNING

The main circuit breaker is located on the front panel. Check that the circuit breaker area on the front panel is clear of any tools before connecting to the power source.

16. Test the printer for proper operation by feeding the paper with the control panel.

17. Disconnect the printer from the power source.

18. Replace the rear panel.

19. Reconnect the printer to the power source. Return the printer to service.

4.35 Ribbon Increment capstan replacement

TOOLS REQUIRED
1/16" hex driver
3 mm hex driver

1. Power down the printer and remove the power cord from the power source. Remove the ribbon from the printer. Raise print mechanism.

2. Using the 3 mm hex driver loosen the tension roller. Slide the belt off of the tension roller.

3. Rotate the increment capstan until the two set screw holes are exposed. Loosen the set screw at the pulley end. Slide the roller toward the pulley until the pin on the latch end of the roller clears the print mechanism and remove the roller from the printer. Use care not to lose the white washers from the roller ends.

4. Loosen the set screw on the pin end of the roller and remove the pin.

5. Place the pin from the old roller onto the new roller. Tighten the screw. Place the pulley head in the other end of the new roller. Place washers on the proper ends of the roller.

6. Replace the increment capstan, pulley end first inside the belt and seat the pin into the bearing port on the bridge end piece. Align the pin at the opposite end of the shaft with its bearing port. While holding the pulley head expand the capstan until the other pin seats inside the bearing port. (Note make sure that capstan has one white

washer against each bearing pocket). Retighten the set screw in alignment with the flat key pad on the pulley shaft.

7. Place the belt back onto the tension pulley.

8. Using a compressive spring gauge tension the belt. The belt should deflect 1/16" when a pressure of 3 lbs. is applied to the belt midway between the pulleys. Tighten the screw.

9. Perform the ribbon pressure capstan adjustment (Procedure 5.9) to adjust the capstan clearance.

10. Return the printer to service.

4.36 Paper puller o-rings replacement

TOOLS REQUIRED
3 mm hex driver
2 mm hex driver

1. Power down the printer and disconnect it from the power source.

2. Remove the paper output panel.

3. Remove the two 3 mm screws securing the paper puller drive shaft to the output area of the printer.

4. Mark the shaft on both sides of each roller on the shaft before removing the rollers.

5. Use a 2 mm hex driver to loosen the set screw inside each roller and slide them off the shaft. Carefully roll off old rings from the rollers. Roll each of the new traction rings on to the rollers taking care not to nick or tear the rings.

6. Replace the rollers onto the shaft at the marked locations and tighten the set screws.

7. Remount the shaft assembly into the printer and reattach the shaft mount to the print mechanism. Tighten the two screws for the mount.

8. Reconnect the printer to the power source. Power up the printer.

9. Test the paper puller by mounting paper onto the printer and checking for tension of the paper between the output tractors and the paper puller.

10. Attach the paper output panel.

11. Return the printer to service.

4.37 Ribbon Increment idler o-rings replacement

TOOLS REQUIRED
3 mm hex driver
2 mm hex driver

1. Power down the printer and disconnect it from the power source.
2. Lift the print mechanism. Remove the ribbon.
3. Use a 3 mm hex driver to remove the two screws securing the idler shaft to the left side of the print mechanism .
4. Mark the shaft on both sides of each roller on the shaft before removing the rollers.
5. Use a 2 mm hex driver to loosen the set screw inside each roller and slide them off the shaft. Carefully roll off old rings from the rollers. Roll each of the new traction rings on to the rollers taking care not to nick or tear the rings.
6. Replace the rollers onto the shaft at the marked locations and tighten the set screws.
7. Remount the shaft assembly into the printer and reattach the shaft mount to the print mechanism. Tighten the two screws for the mount.
8. Test the roller by remounting the ribbon onto the printer and takeup roller. Lower the print mechanism.
9. Reconnect the printer to the power source. Power up the printer. Run ribbon steps from the console to verify the proper operation of the traction rollers.
10. Return the printer to service.

V. PRINTER ADJUSTMENTS

5.1 Hammer Flight Time Adjustment

TOOLS REQUIRED
1.5 mm Hex driver
3 mm Hex driver
DMM

OPTIONAL:
Oscilloscope 20 MHz w/ leads to perform procedure 5.1.2.

1. Power down the printer and remove the power cord from the power source.

2. Remove the paper from the printer.

3. Open the paper input door. Place a mat or pad inside the printer.

4. Disconnect the plenum fan(s) from the power harness below the hammerbank plate. Ensure that the wires are properly marked +24 (red) and G (black) for correct reassembly.

5. Turn the two quarter turn fasteners holding the plenum, and remove the plenum from the printer.

6. Remove the four screws securing the top cover under the input tractors

7. Power up the printer.

8. Use the DMM to check VCL voltage at bottom of C56 referenced to LGND. VCL for CMC-7 is 1.15 VDC. VCL for E13-B is 1.43 VDC. Adjust the R88 potentiometer to adjust VCL on each board. Both boards must match.

   To place the printer into self-test and to select FLIGHT TIME, perform the following:

9. Press the ONLINE key, the display reads "Offline".

10. Press the PROG key, the display reads "Job Select".

11. Use the NEXT key to step through the option titles.

12. Press the ENTER key to select the "Flight Time" routine.

    If an oscilloscope is to be used, perform 5.1.2 OSCILLOSCOPE PROCEDURE or continue with 5.1.1 PRINTER DISPLAY PROCEDURE.

5.1.1 PRINTER DISPLAY PROCEDURE

1. Use the NEXT key to +1 increment, the UP ARROW key to +10 increment, or the DOWN ARROW key to -10 decrement the column number to test.
2. Press the ENTER key to fire the hammer column.
3. The display will indicate the flight time period with a four digit number.
4. The flight time for E13B isxxxx± 50, the flight time for CMC7 isxxxx ± 50, adjust the appropriate backstop screw to this specification.
5. Repeat steps 1 to 4 for all columns to be adjusted.
6. Press CLEAR twice to return to Program Mode and select "Print Test".
7. Insert a sheet of check stock in the printer and take a print sample to verify good print quality.
8. Power off the printer and remove the power cord.
9. Replace the fan plenum and reconnect the fan(s) power harness.
10. Close the paper input door.
11. Attach the power cord, power up the printer, and return to service.

5.1.2 OSCILLOSCOPE PROCEDURES

1. Power down the printer.
2. Remove the four screws securing the front top cover panel and remove the panel.
3. Attach the scope probe to the bottom of resistor R81.
4. Power up the printer.
5. Set up the oscilloscope as follows: trigger - negative, time base - 0.5 ms/div., amplitude - 10V/div.
6. Use the NEXT key to +1 increment, the UP ARROW key to +10 increment, or the DOWN ARROW to -10 decrement the column number to test.
7. Press the ENTER key to fire the hammer column.
8. The flight time for E13B isxxxx ± .025 ms and the flight time for CMC7 isxxxx ± .025 ms. Adjust the appropriate backstop screw to this specification.
9. Repeat steps 6 to 8 for all columns to be adjusted.
10. Disconnect the oscilloscope probe.
11. Press CLEAR twice to return to Program Mode and select "Print Test".
12. Insert a sheet of check stock in the printer and take a print sample to verify good print quality.
13. Power off the printer and remove the power cord.
14. Replace the fan plenum and reconnect the fan power harness.
15. Close the paper input door.
16. Attach the power cord, power up the printer, and return to service.

5.2 Transducer Adjustment

TOOLS REQUIRED
3 mm Ball end hex driver
.003" shim
20 MHz Oscilloscope with two channels and probes

1. Power down the printer and remove the power cord from the power source.

2. Remove the drum guard and the rear access panel.

3. Loosen the screw that clamps the transducer to the transducer mounting bracket.

4. Preset the transducer to a mechanical gap of 0.003 inches between the transducer and the drum character clock marks, tighten the clamp screw only enough to hold the transducer.

WARNING

Spin the drum by hand to verify clearance and to prevent serious damage to the transducer or the drum.

5. Set up an oscilloscope to monitor the analog output of the transducer: time base - 1 ms/div, amplitude - 0.5 V/div, test point - Microprocessor CCA, U23-6 or cathode of CR1. The required signal should have a positive peak amplitude of 1.2V to 1.5V.

6. With the a second probe monitor TP-7 on the outside edge of the Microprocessor CCA to observe the digital (+5V) character clock signal.

7. Install the power cord and power up the printer.

8. Adjust the transducer in to raise or out to lower to obtain the desired wave form. Drop outs are not acceptable, adjust the transducer as required. Tighten the clamp screw.

9. Put paper in the printer and take a print sample in self-test mode, and verify the phasing adjustment (overall vertical print quality). If acceptable go to step 17, if adjustment is required continue with the next step.

10. Power down the printer.

11. Loosen slightly the two screws that secure the transducer bracket.

12. To raise all the characters, rotate the bracket towards the rear of the print mechanism. To lower all the characters, rotate the bracket towards the front of the print mechanism.

13. Be certain to retest the transducer as in step 4, for gap and clearance.

14. Power up the printer and retest phasing until desired results are achieved, steps 9 to 13.

15. Power down the printer.

16. Replace the drum guard and rear access panel.

17. Attach the power cord, power up the printer.

18. Run self-test "test print" to verify proper transducer operation, and return to service.

5.3 Paper Out Sensor Adjustment

TOOLS REQUIRED
2 mm hex driver

1. With power on, loosen the two screws securing the paper out sensor.

2. Install a piece of paper in the tractor with the paper out sensor.

3. Adjust the sensor until it is approximately 0.2 inches below the paper and the sensor "on" indicator is illuminated. Test the adjustment by removing the paper and the indicator should go out. Tighten the mounting screws.

4. Run "test print" in self test mode to verify proper paper out sensor operation and return to service.

5.4 Paper Motion Sensor Adjustment

TOOLS REQUIRED
2 mm hex driver

1. Loosen the two screws securing the sensor to the paper motion bracket.

2. Install a piece of paper in the tractor with the paper motion sensor.

3. Adjust the sensor until it is approximately 0.2 inches below the paper and the sensor "on" indicator is illuminated. Test the adjustment by removing the paper and the indicator should go out.

CAUTION

For consistent results, make certain that the sensor centerline aligns with the center of the tractor pins.

4. Run "test print" in self test mode to verify proper paper motion sensor operation and return to service.

5.5 Tractor Phasing Adjustment

TOOLS REQUIRED
2.5 mm hex driver
6 mm hex driver

Tractor pins must be aligned on the same spline for proper paper tension and print quality. If a tractor has been repaired or replaced, verify the tractor pins are aligned with the adjacent tractor. If misaligned, follow the tractor replacement instructions in section 4.14.

5.6 Ribbon Drive Belt Adjustment

TOOLS REQUIRED

1. Test the tension of the ribbon drive belt with a compressive spring gauge (0 - 10 lb.) in the center of the belt, as viewed from the rear of the print mechanism.
2. The spring gauge should indicate 3 lb. for a 1/16" deflection.
3. Loosen the screw securing the tension roller to adjust the tension.
4. Upon completion of the adjustment, run "print test" in self test mode to verify consistent ribbon steps.

5.7 Ribbon Take-Up belt Adjustment

TOOLS REQUIRED

1. Power down the printer.
2. Remove the ribbon from the printer.
3. Loosen the two screws securing the ribbon take-up motor bracket.
4. With the motor bracket, adjust the belt tension to read 3 lbs. at 1/16" deflection using the compressive spring gauge.

5. Replace the ribbon onto the printer.

6. Power up the printer, verify the ribbon take-up belt does not slip, and return the printer to service.

5.8 Ribbon Buffer Arm Adjustment

TOOLS REQUIRED

1. Power down the printer.

2. Remove the ribbon from the printer.

3. Adjust the drag on the ribbon buffer arm with the collar clamp and wavy washer on the right front idler mandrel.

4. Attach a strain gauge (0-10 lb. or equiv.) to the ribbon buffer arm and raise the arm from the down position with an 8 lb. force.

5. Power up printer with a ribbon installed.

6. With the RIBBON STEP key, verify the buffer arm controls the ribbon without going beyond the vertical position, increase the ribbon drag as required.

5.9 Ribbon Pressure Roller Adjustment

TOOLS REQUIRED

1. Power off the printer.

2. With the ribbon removed, adjust the gap between the pressure roller and the capstan with a .001 in. shim.

3. The capstan should always drive the pressure roller with the shim installed and touch any high spots without the shim installed.

4. Install a ribbon and power up the printer.

5. Use the RIBBON STEP key and self test prints to verify positive ribbon drive and smooth passage of the ribbon through the gap. Make fine adjustments to the pressure roller to eliminate wrinkles.

6. Return the printer to service.

5.10 Paper Feed Belt Adjustment

TOOLS REQUIRED
5 mm hex driver
Compressive spring gauge

5.10 Paper Feed Belt Adjustment

TOOLS REQUIRED
5 mm hex driver
Compressive spring gauge

1. Power down the printer and remove the power cord from the power source.

2. Remove the screws securing the belt guard and remove the guard.

3. Test the the belt deflection with a compresson gage between an idler pulley and the motor pulley. A nominal reading is 2.5 lbs with a 3/16" deflection.

4. If an adjustment is required, use a 5 mm hex driver to loosen the screw in the rear belt tension roller. Adjust the tension to 2.5 lbs with a 3/16" inch deflection.

5. Retighten the idler pulley. Reverify the belt tension.

6. Install the belt guard and secure with the screws removed earlier.

7. Reconnect printer to power source and test the printer by advancing paper both by line and by form and printing fixed pattern at 6 lpi for two pages. Check printout for consistent line spacing.

8. Return the printer to service.

5.11 Paper puller belt adjustment

TOOLS REQUIRED
3 mm hex driver

1. Disconnect the printer from the power source. Remove the paper exit panel.

2. Using a 3 mm hex driver loosen the two screws securing the paper puller motor to the mounting bracket.

3. Tension the belt by rotating the motor by hand. Check the belt tension with the compressive spring gauge. The belt should deflect 1/16” when 3 lbs pressure is applied to the belt midway between the two pulleys.

4. Reconnect the printer to the power source. Power up the printer. Test the paper puller by advancing paper and checking for proper paper tension at the output tractors. Disconnect the printer from the power source.

5. Mount the paper exit panel. Reconnect the printer to the power source. Return the printer to service.

VI. TROUBLE SHOOTING

PRELIMINARY CHECKLIST

In the event of a fault or error condition check all items on this list first.
If any item is not correct it may trigger false errors or faults.

✓Check for proper grounding of the printer to the power system of the building.
Contact an electrician to check and correct this situation.

✓For any high load devices on the power circuit that the printer is connected to (IE. Air compressors, Air conditioners, Hydraulic equipment etc.). If any are on the circuit connect the printer to another circuit.
Contact an electrician to check and correct this situation.

✓Line voltage present at the power source is within specified range.
Contact an electrician for correction of supply voltage

✓Remove the rear cover of the printer. With the printer powered on check the output levels of the power supply.
They must be within the following ranges.

V1 = 5 VDC± .1
V2 = 24 VDC ± .5
V3 = 24 VDC ± .5
V4 = 12 VDC ± .5

If any voltages are not within these ranges remove the cover (if applicable), locate the potentiometers for those voltages and adjust them. If any of the voltages cannot be adjusted then replace the power supply and retest the voltages.

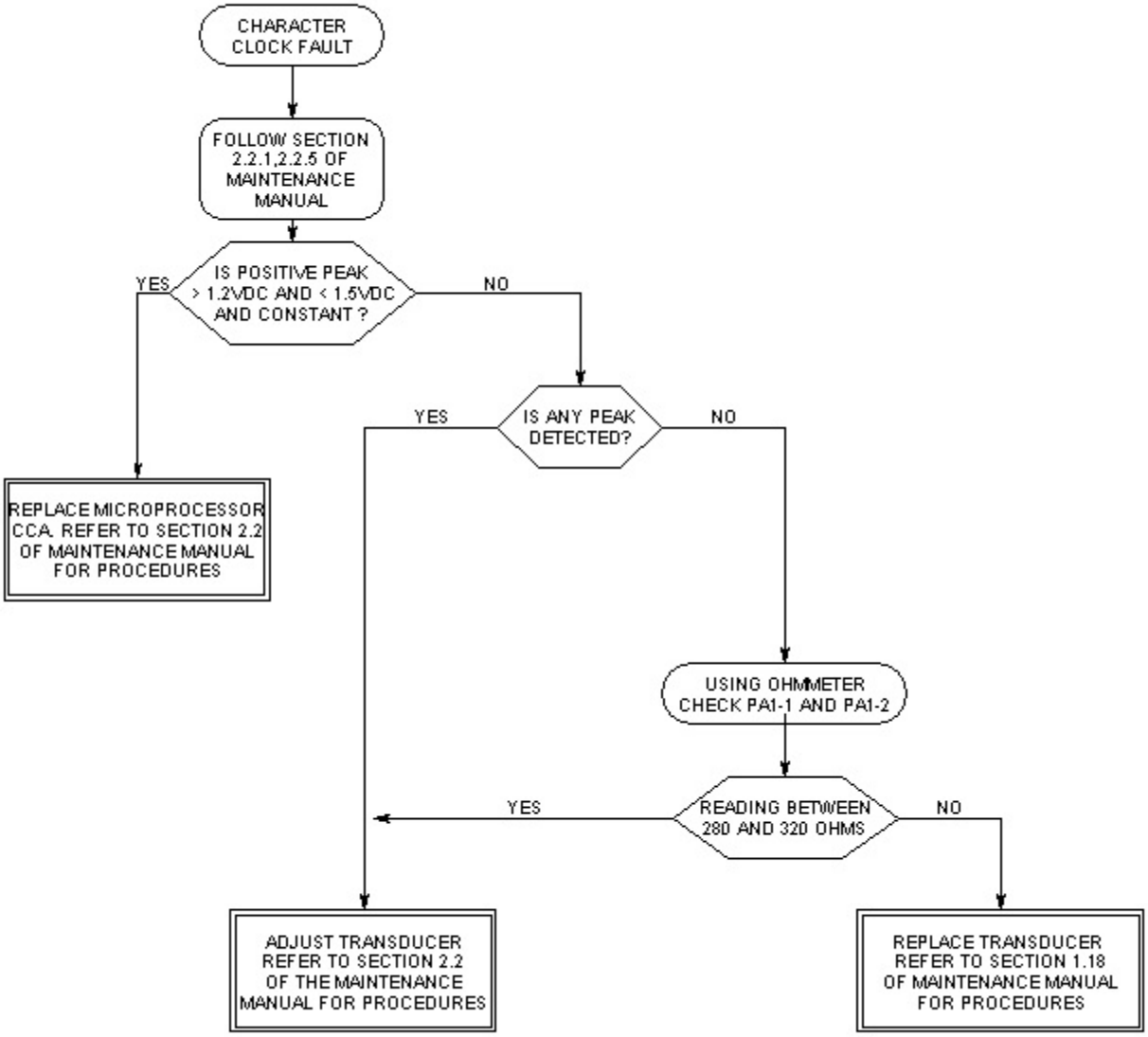

Character Clock Fault Page 1

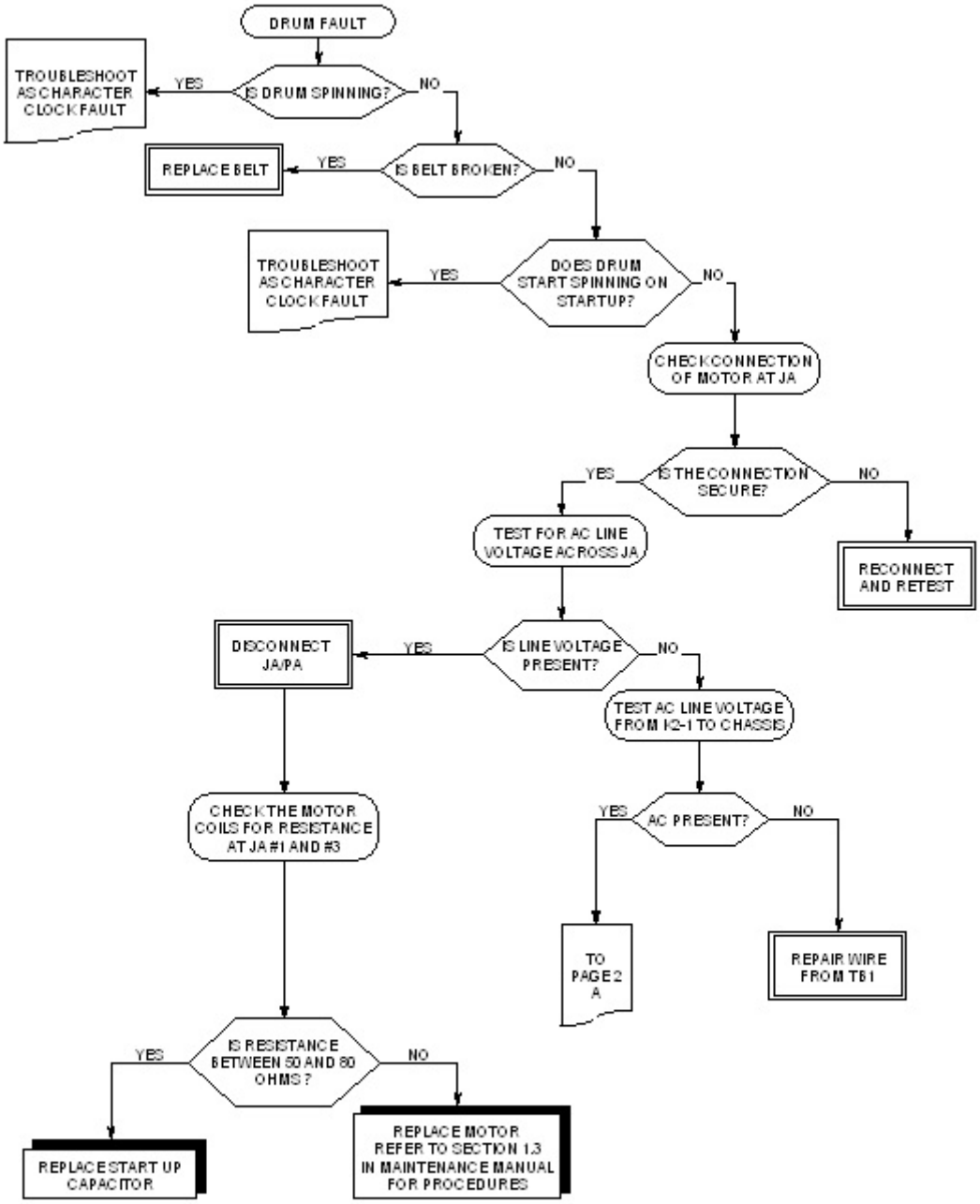

Drum Fault Page 1

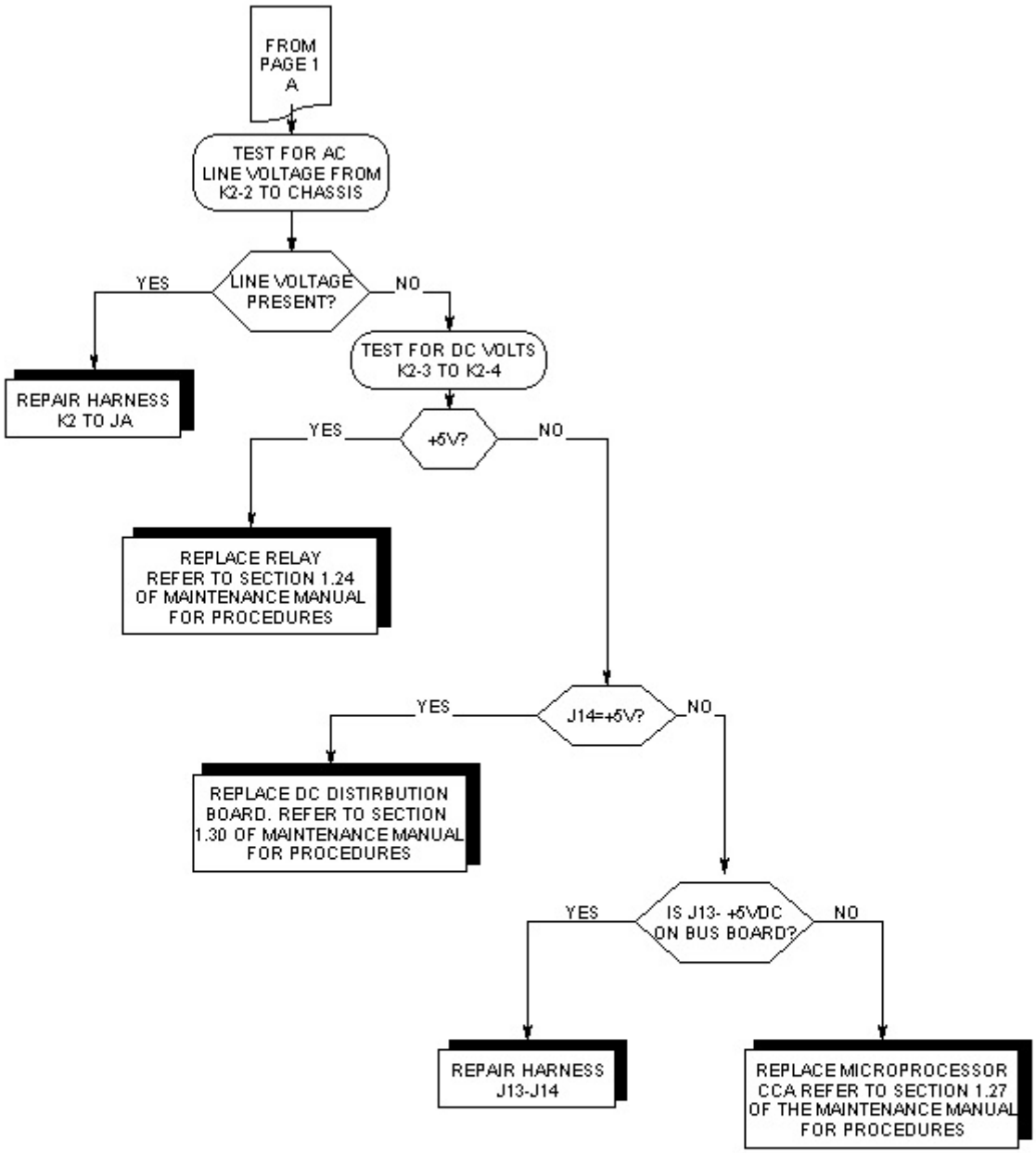

Drum Fault Page 2

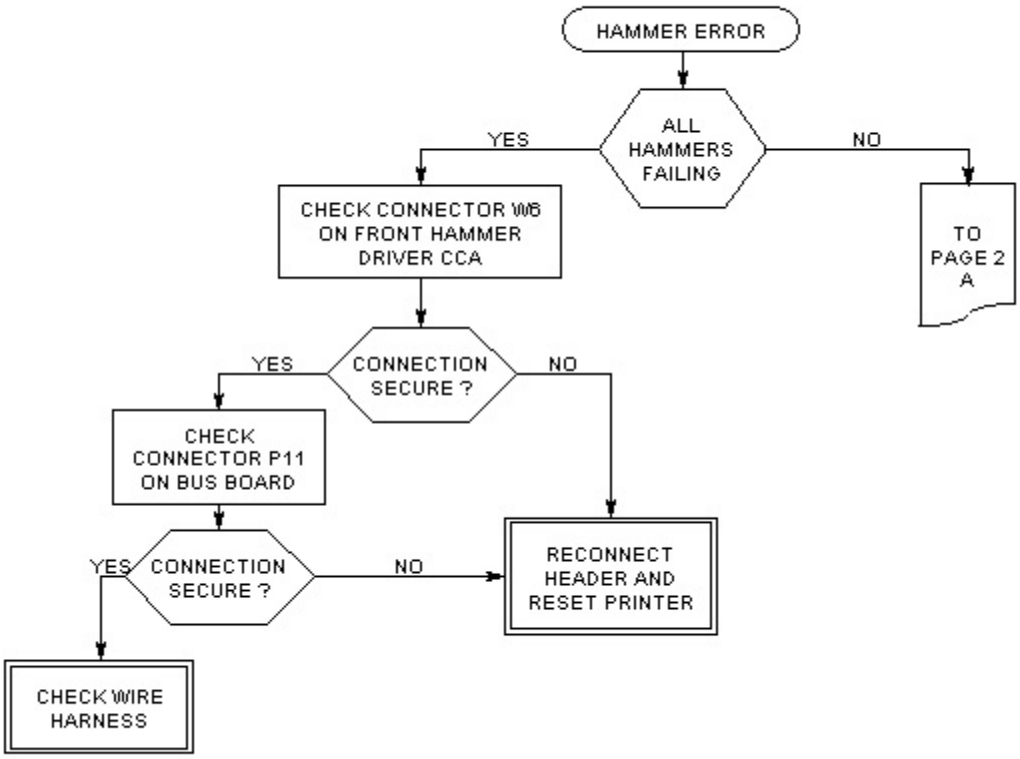

Hammer Error Page 1

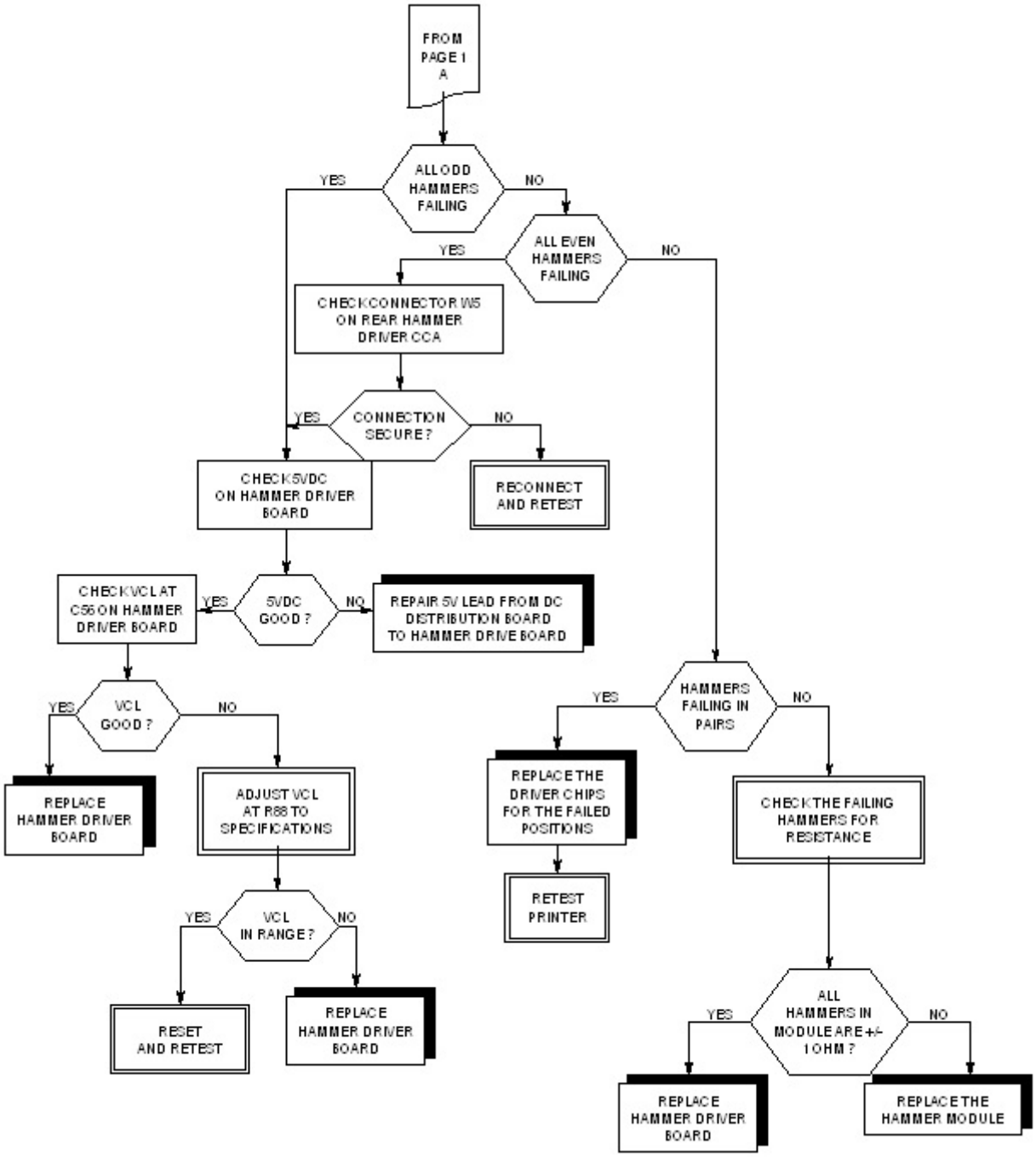

Hammer Error Page 2

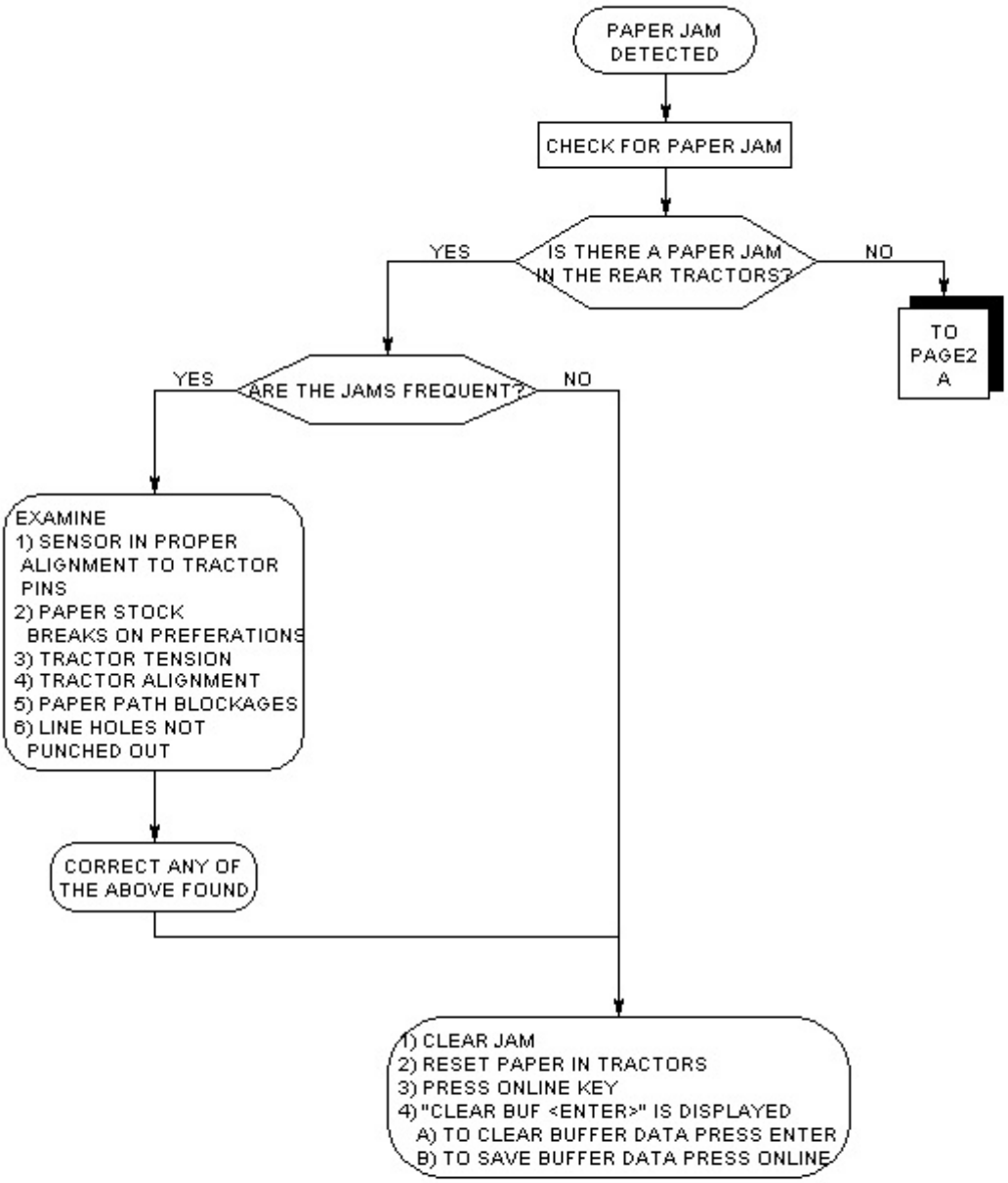

Paper Jam Page 1

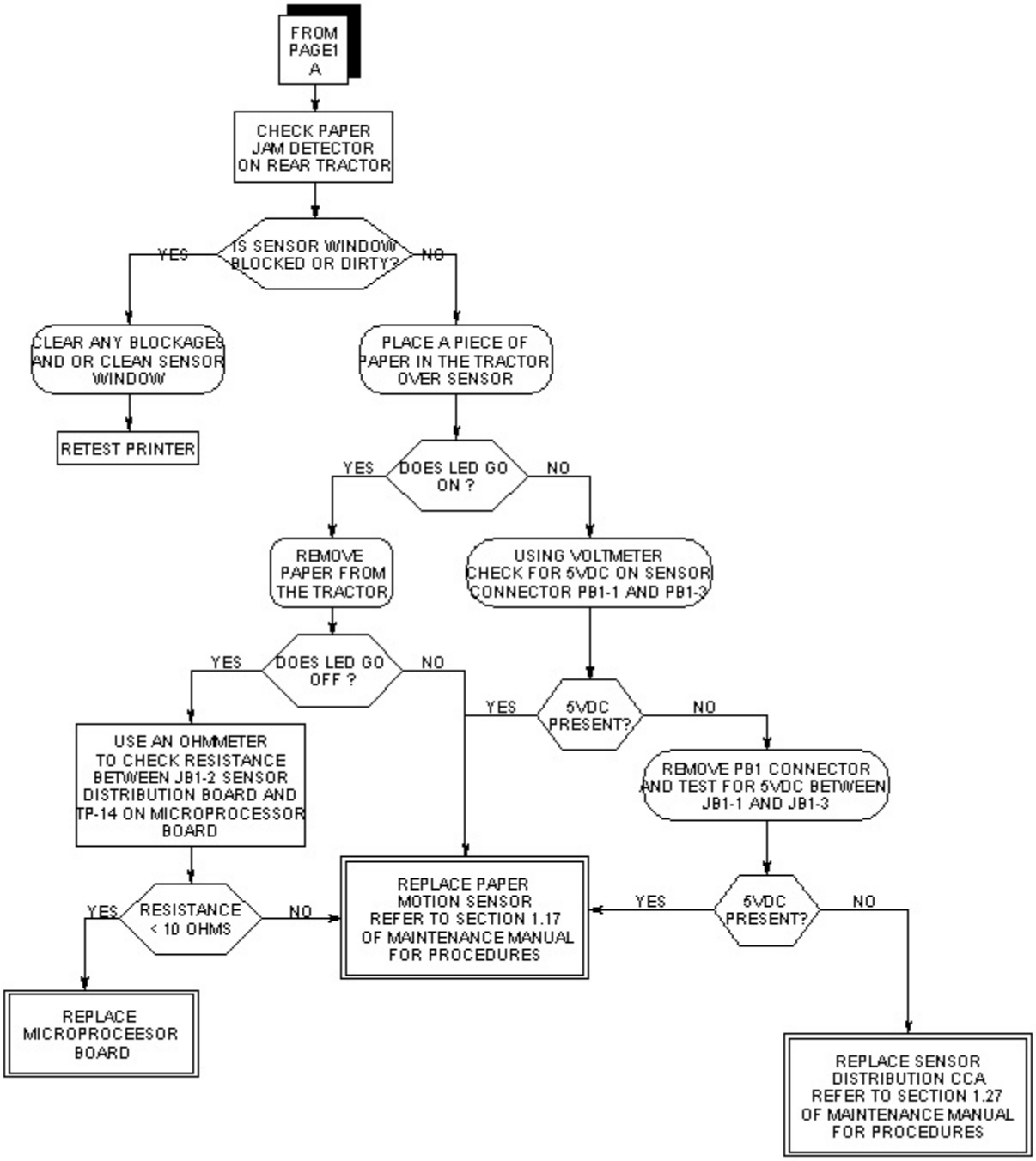

Paper Jam Page 2

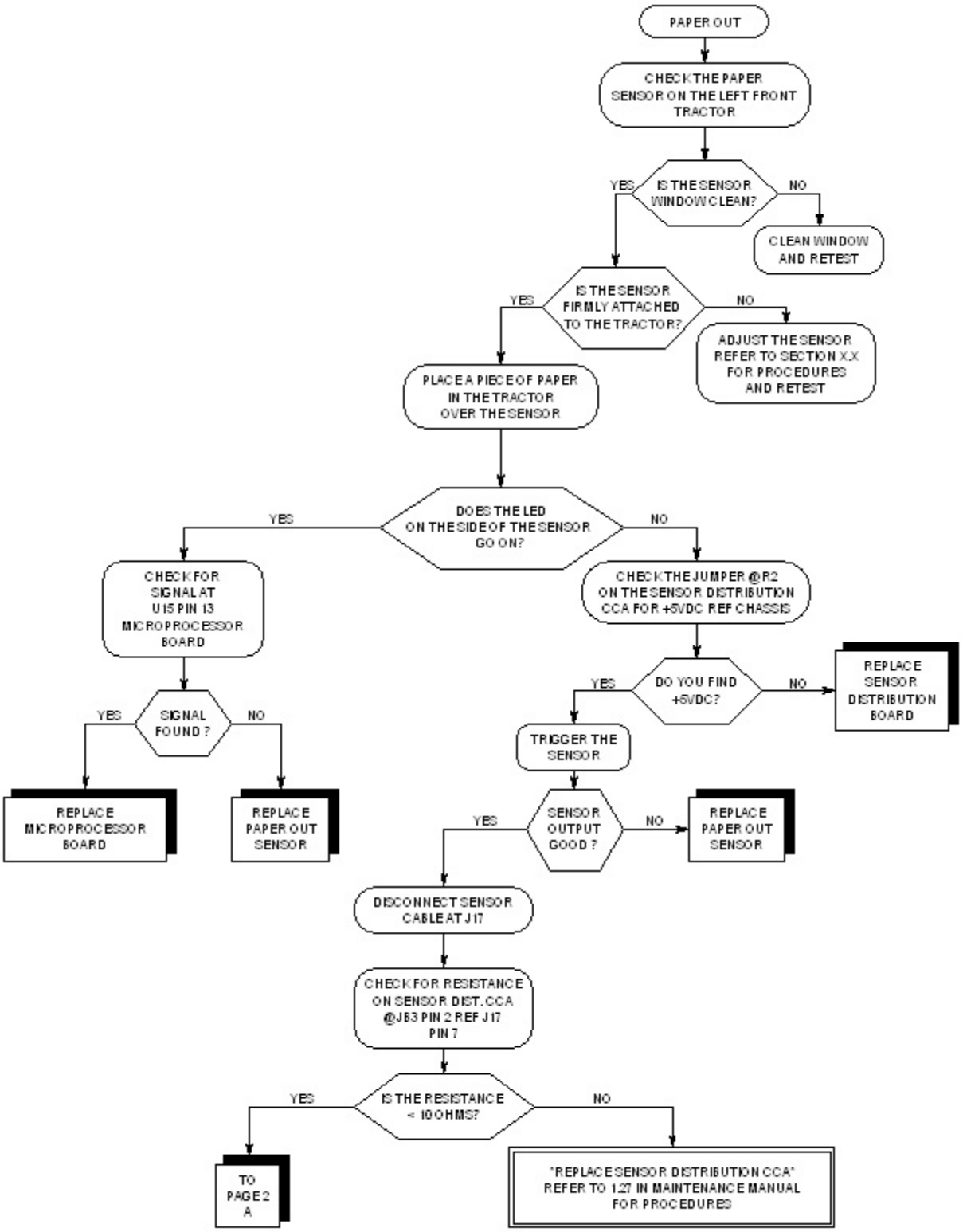

Paper Out Page 1

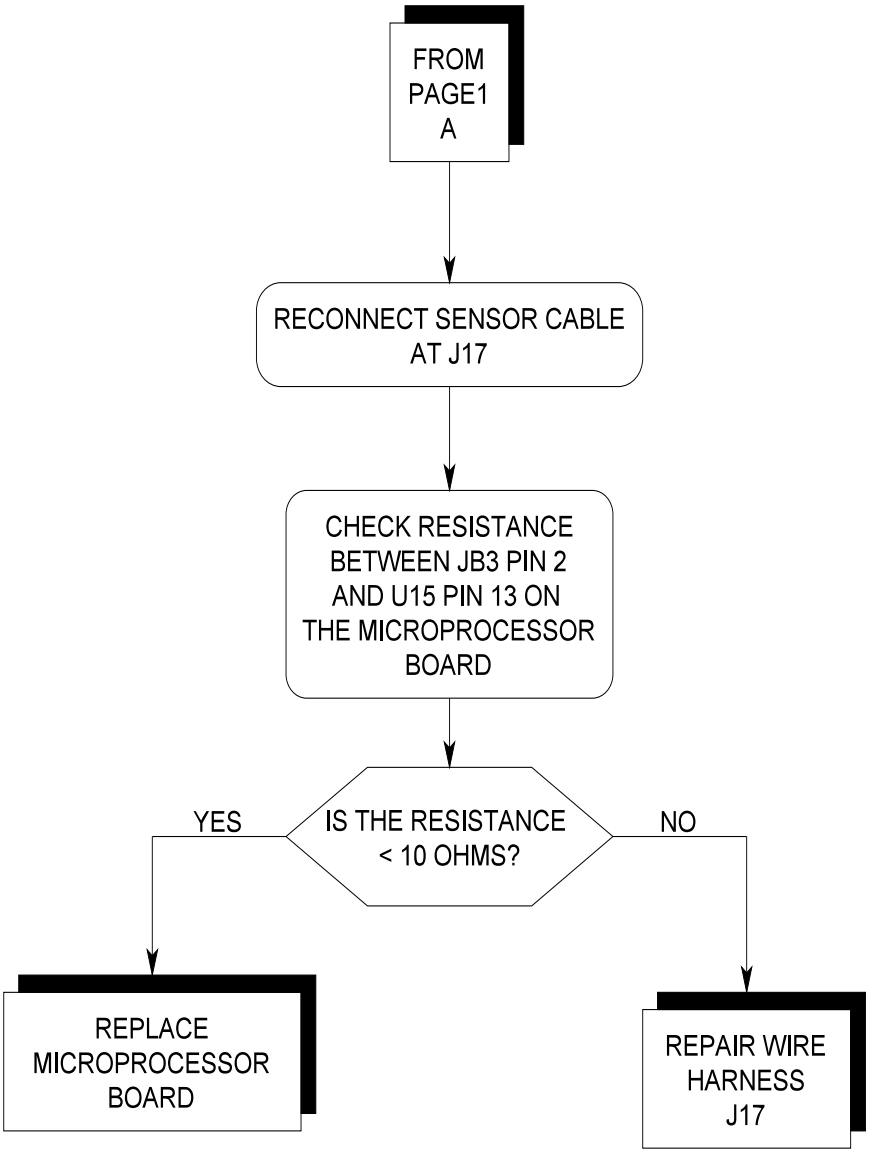

Paper Out Page 2

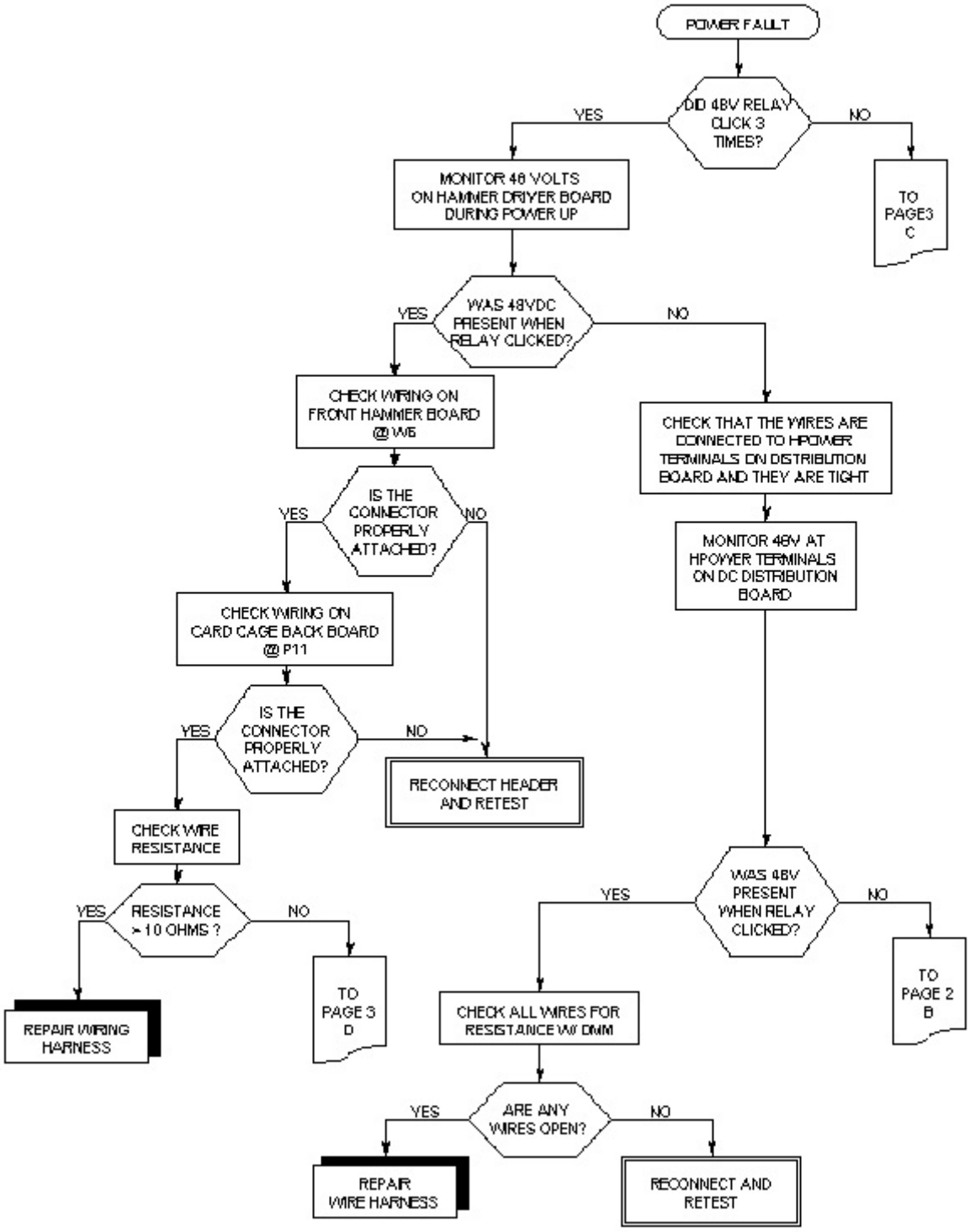

Power Fault Page 1

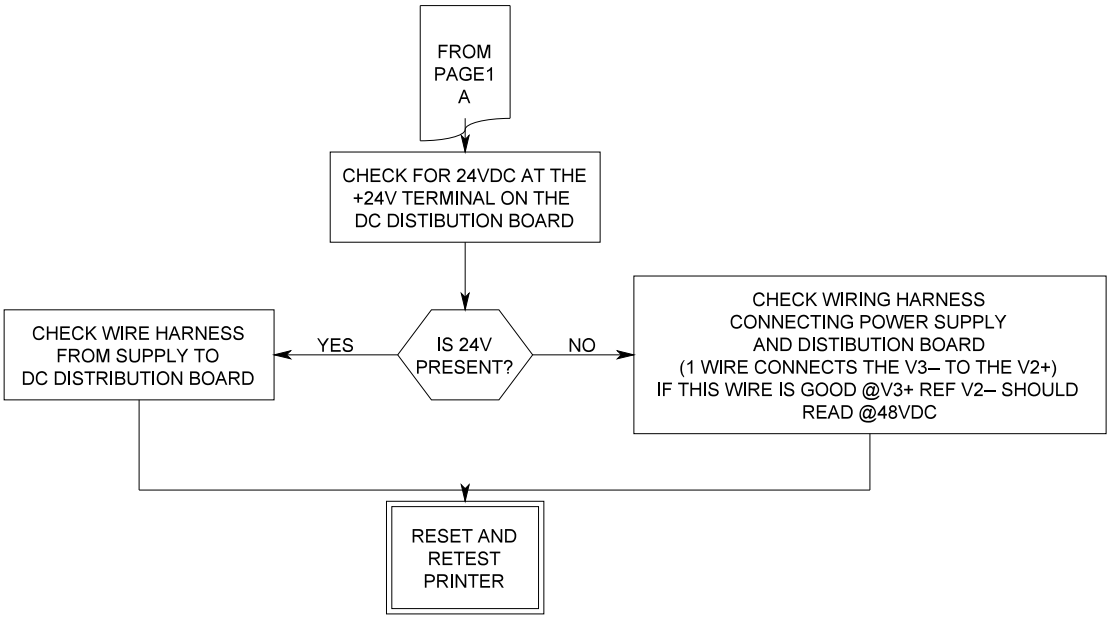

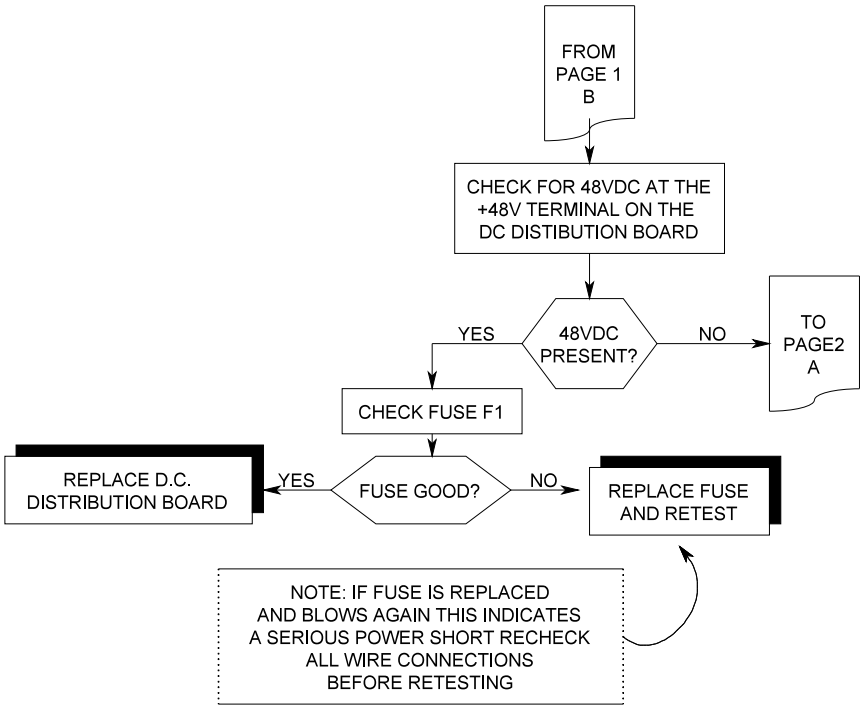

Power Fault Page 2

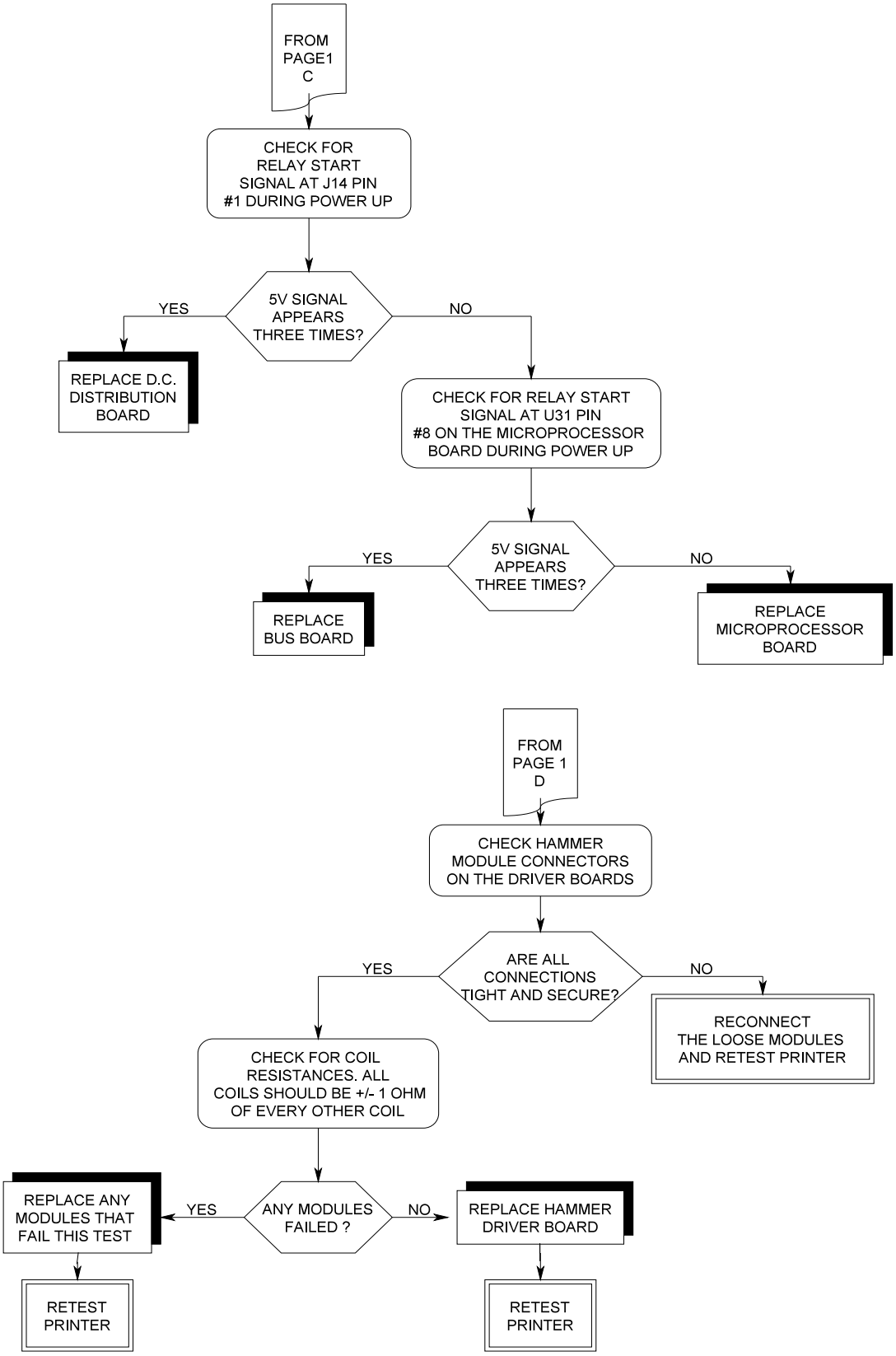

Power Fault Page 3

(This page left intentionally blank.)